Formal Languages and Automata

Stephan Schulz & Jan Hladik

stephan.schulz@dhbw-stuttgart.de
jan.hladik@dhbw-stuttgart.de

with contributions from David Suendermann

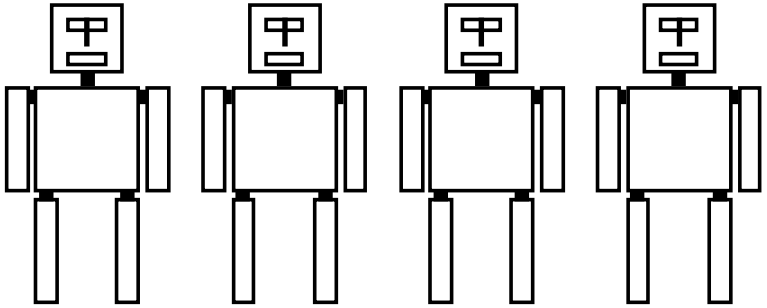

DHBW Stuttgart
Duale Hochschule
Baden-Württemberg

Introduction

- Stephan Schulz
  - Dipl.-Inform., U. Kaiserslautern, 1995
  - Dr. rer. nat., TU München, 2000
  - Visiting professor, U. Miami, 2002
  - Visiting professor, U. West Indies, 2005
  - Lecturer (Hildesheim, Offenburg, . . .) since 2009
  - Industry experience: Building Air Traffic Control systems
    - System engineer, 2005
    - Project manager, 2007
    - Product Manager, 2013
  - Professor, DHBW Stuttgart, 2014

Research: Logic & Automated Reasoning

Introduction

- Jan Hladik
  - Dipl.-Inform.: RWTH Aachen, 2001
  - Dr. rer. nat.: TU Dresden, 2007
  - Industry experience: SAP Research
    - Work in publicly funded research projects
    - Collaboration with SAP product groups
    - Supervision of Bachelor, Master, and PhD students
  - Professor: DHBW Stuttgart, 2014

Research: Semantic Web, Semantic Technologies, Automated Reasoning

Goals for Today

- Getting acquainted
- Practical issues
- Course outline and motivation
- Basics of formal languages
- Regular expressions

Practical Issues

- One lecture per week
  - Wednesday, 8:45-12:15
  - 10 minute break around 10:15
  - I'll try to keep it entertaining. . .
- Exceptions
  - 24.9. (T2000 examination)
  - 19.11. (Tag der Informatik)
    - This is the review class, need to reschedule
- Written examn
  - Calender week 48 (24.11.–28.11.)

Literature

- Scripts
  - The most up-to-date version of this document as well as auxiliary material will be made available online at

    `http://wwwlehre.dhbw-stuttgart.de/~sschulz/fla2014.html`
  - A comprehensive (though German) script by Karl Stroetmann covers many of the topics discussed in this lecture: `http://wwwlehre.dhbw-stuttgart.de/~stroetma/Formal-Languages/formal-languages.pdf`
- Books
  - John E. Hopcroft, Rajeev Motwani, Jeffrey D. Ullman: Introduction to Automata Theory, Languages, and Computation
  - Michael Sipser: Introduction to the Theory of Computation
  - Dirk W. Hoffmann: Theoretische Informatik
  - Ulrich Hedtstück: Einführung in die theoretische Informatik

Computing Environment

- For practical exercises, you will need a complete Linux/UNIX environment. If you do not run one natively, there are several options:
  - You can install VirtualBox (`https://www.virtualbox.org`) and then install e.g. Ubuntu (`http://www.ubuntu.com/`) on a virtual machine
  - For Windows, you can install the complete UNIX emulation package Cygwin from `http://cygwin.com`
  - For MacOS, you can install `fink` (`http://fink.sourceforge.net/`) or MacPorts (`https://www.macports.org/`) and the necessary tools
- You will need at least `flex`, `bison`, `gcc`, `grep`, `sed`, `AWK`, `make`, and a good text editor

Your expectations?

- Phase 1 (individual)
  - 3 minutes
  - List at least 3 topics/results you want/expect from this course
- Phase 2 (partners)
  - 3 minutes
  - Condense to “top 3” choices
- Phase 3
  - Presentation

Outline

Introduction

Regular Languages and Finite State Automata

Formal languages

- Sets of words (strings) over a finite alphabet
- Examples
  - All names in a phone directory
  - All phone numbers in a phone directory
  - All legal C identifiers
  - All legal C programms
  - All legal HTML 4.01 Transitional documents
  - The empty set
  - The set of all ASCII strings
  - The set of all Unicode strings

More?

Questions on languages

- Language description?
  - What are the legal word in a language?
  - What are syntactically correct LISP programs?
  - How can we describe languages in general?

Formal grammars – regular expressions

- Language recognition/understanding?
  - Is this a legal word in a language?
  - How is this JAVA program constructed?
  - How should I translate this C program/render this HTML page?

Finite state machines – Push-down automata – Syntax trees – Universal computers

More questions on languages

- For a given language, can I decide if a word is in the language?
  - . . . with a finite and fast machine?
  - . . . with a simple but infinite machine?
  - . . . with arbitrary but known resources?
  - . . . at all?

Abandon all hope…

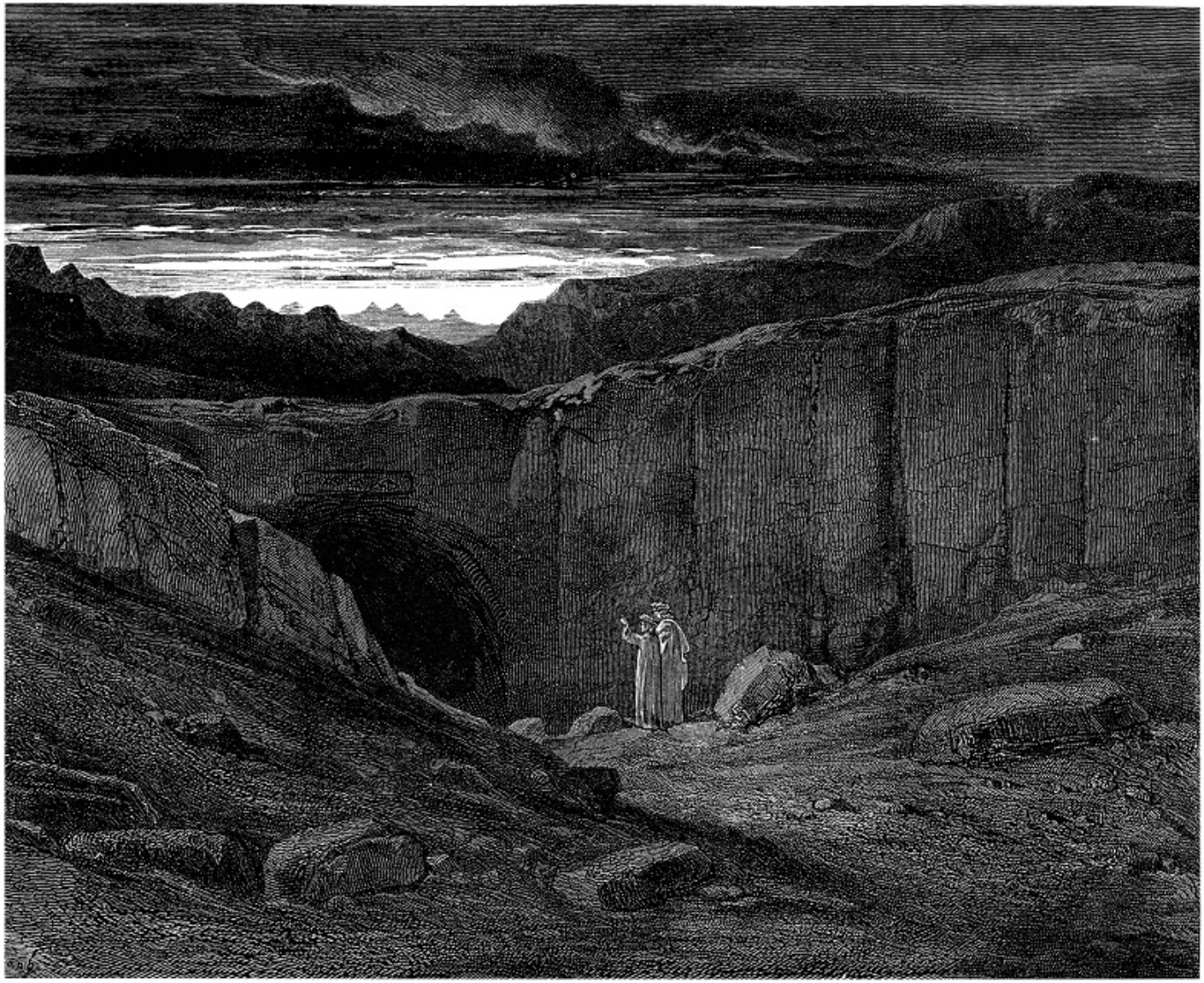

Finite Automata - Example

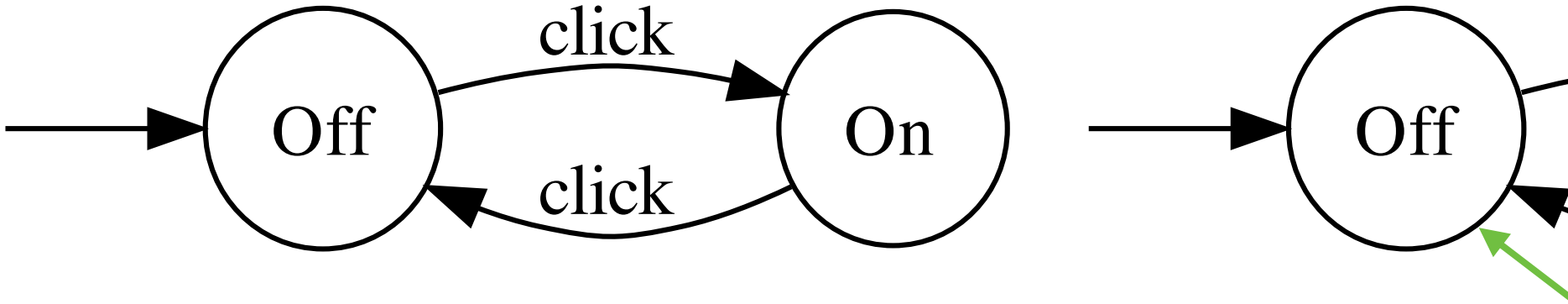

Finite Automata - Example

- Formally:
  - $Q = \{\text{Off}, \text{On}\}$ is the set of states
  - $\Sigma = \{\textit{click}\}$ is the alphabet
  - The transistion function δ is given by

δ	click
Off	On
On	Off

  - The initial state is Off
  - There are no accepting states

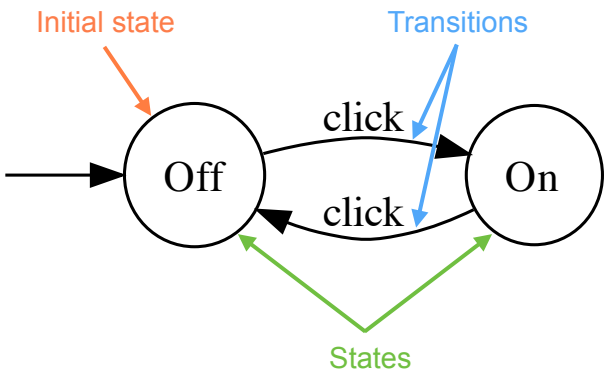

ATC scenario

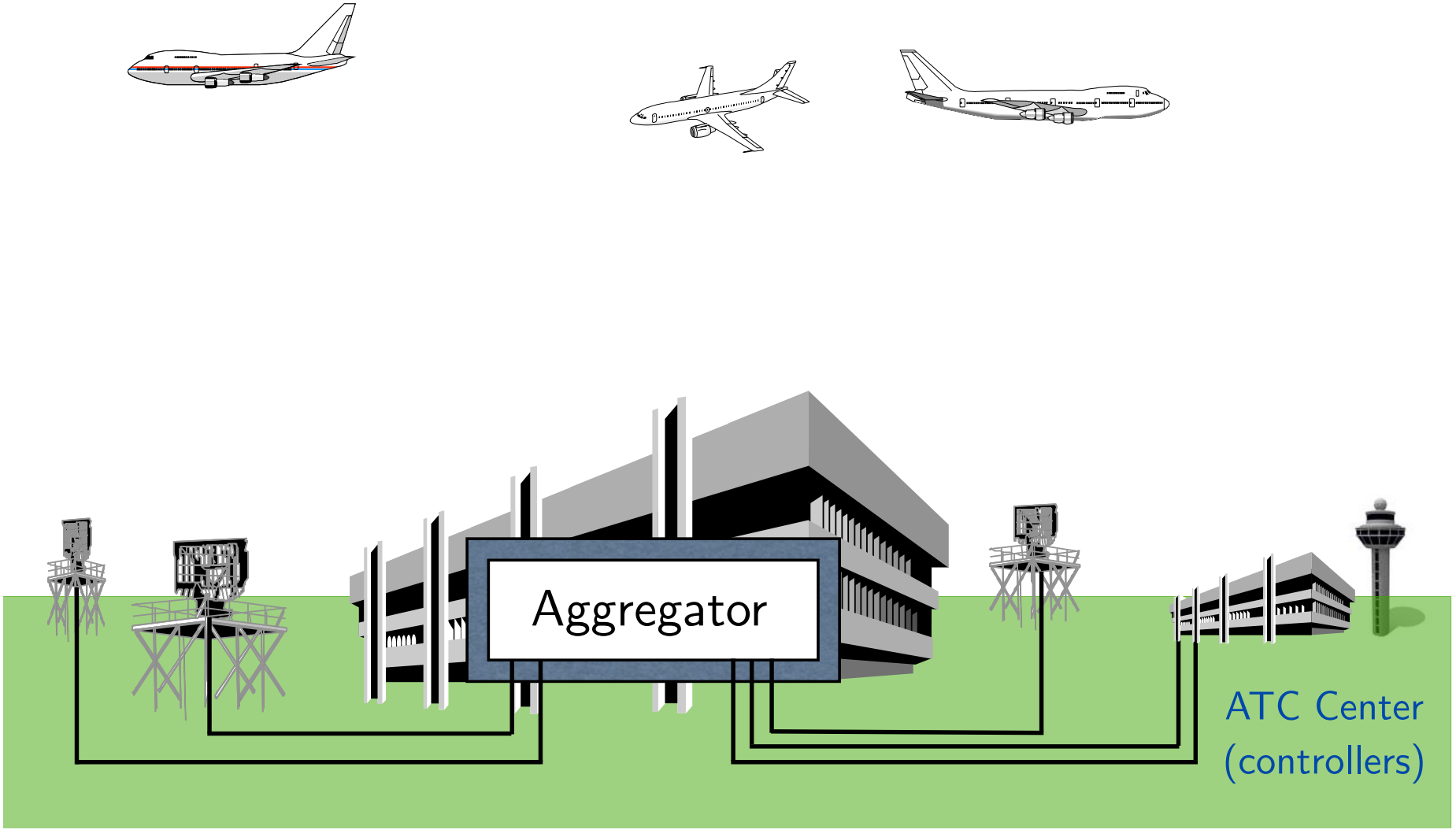

ATC redundancy

Aktive server:

- Accepts sensor data
- Provides ASP
- Sends "alive" messages

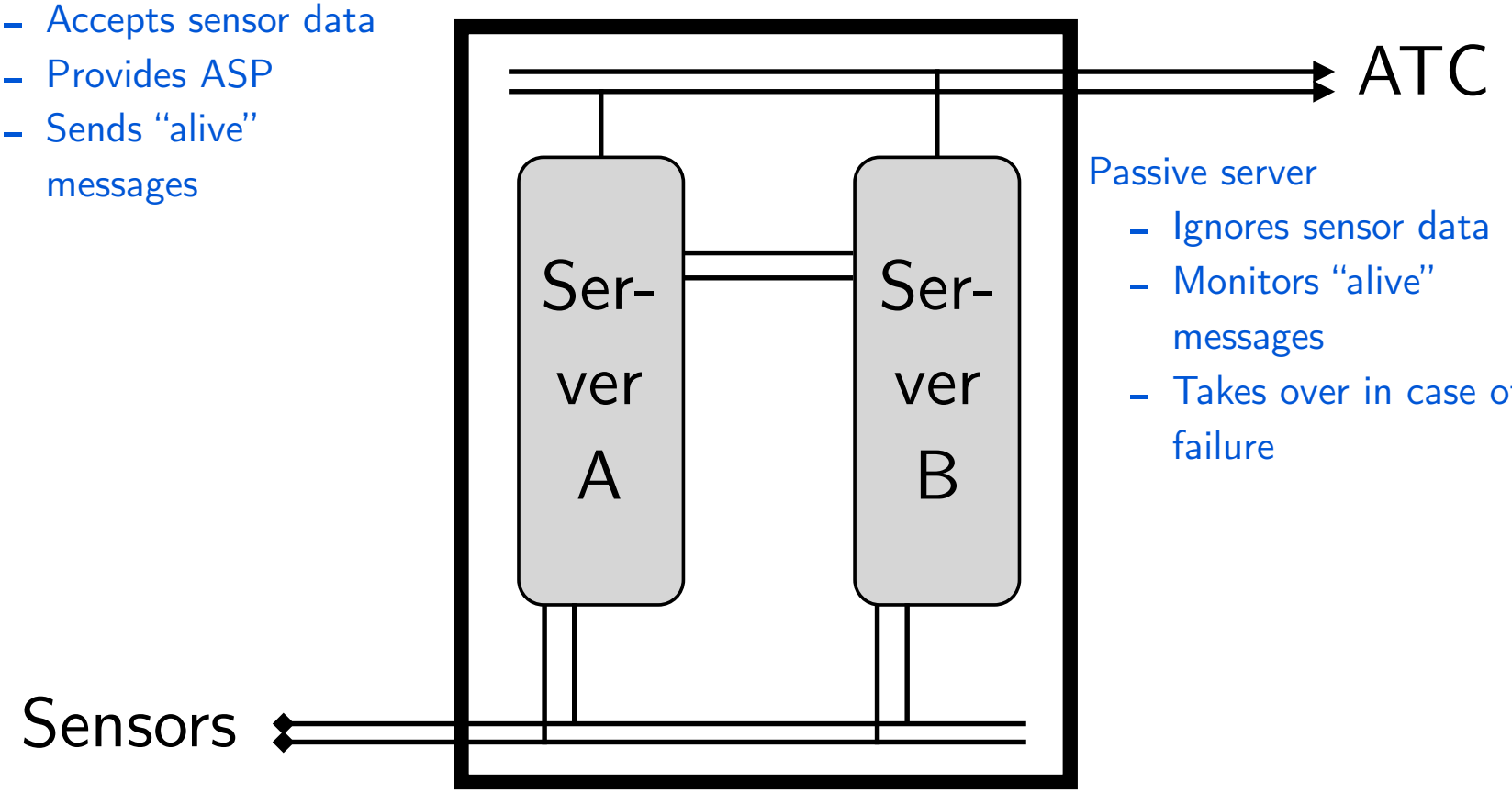

Passive server

- Ignores sensor data
- Monitors "alive" messages
- Takes over in case of failure

DFA to the rescue

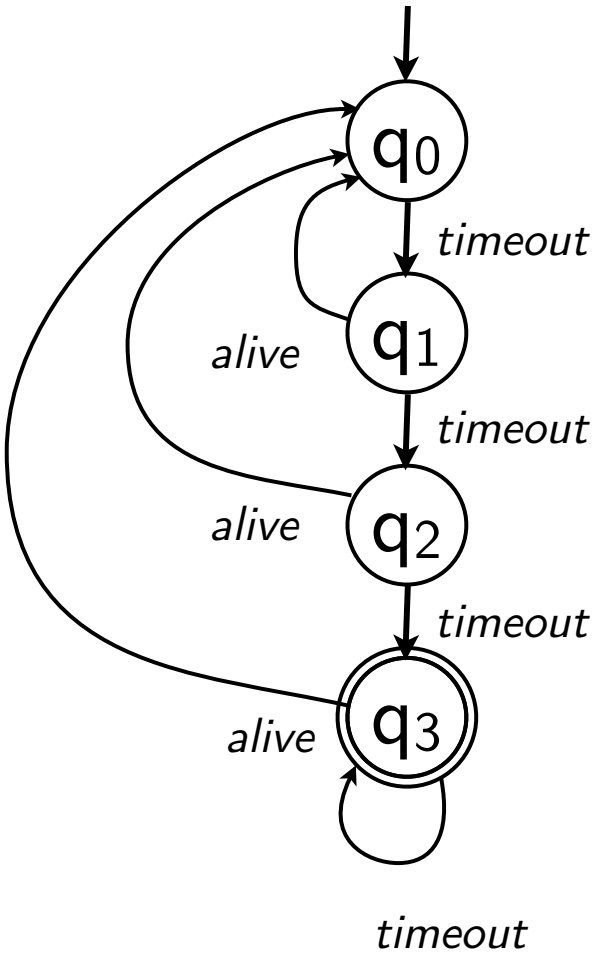

- Two events ("letters")
  - timeout: 0.1 seconds have passed
  - alive: message from active server
- States q_0, q_1, q_2: Server is passive
  - No processing of input
  - No sending of alive messages
- State q_3: Server becomes active
  - Process input, provide output to ATC
  - Send alive messages every 0.1 seconds

Turing Machines

- “Universal computer”
  - Very simple model of a computer
    - Infinite tape, one read/write head
    - Tape can store letters from a alphabet
    - FSM controls read/write and movement operations
  - Very powerful model of a computer
    - Can compute anything any real computer can compute
    - Can compute anything an “ideal” real computer can compute
    - Can compute everything a human can compute (?)

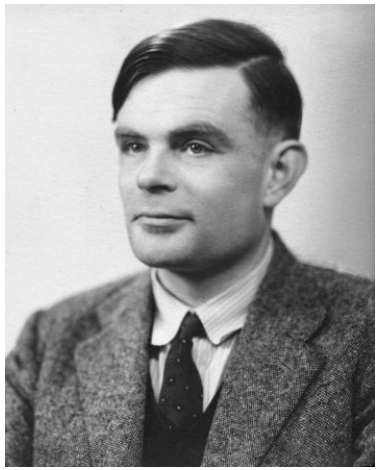

Example applications for formal languages and automata

- HTML and web browsers
- Speech recognition and understanding grammars
- Dialog systems and AI (Siri, Watson)
- Regular expression matching
- Compilers and interpreters of programming languages

Your expectations? (revisited)

- Phase 1 (individual)
  - 3 minutes
  - List at least 3 topics/results you want/expect from this course
- Phase 2 (different partners)
  - 3 minutes
  - Condense to “top 3” choices
- Phase 3
  - Presentation

Basics of formal languages

Alphabets

- An alphabet Σ is a finite, non-empty set of characters (symbols, letters):

$$\Sigma = \{c_1, \cdots, c_n\}. \tag{1}$$

- Examples:
  1. The alphabet $\Sigma_{\text{bin}} = \{0, 1\}$ can express integers in the binary system.
  2. The English language is based on the alphabet $\Sigma_{\text{en}} = \{\mathtt{a}, \cdots, \mathtt{z}, \mathtt{A}, \cdots, \mathtt{Z}\}$.
  3. The alphabet $\Sigma_{\text{ASCII}} = \{0, \cdots, 127\}$ represents the set of ASCII characters [American Standard Code for Information Interchange] coding letters, digits, and special and control characters.

Alphabets: ASCII code chart

ASCII Code Chart

	0	1	2	3	4	5	6	7	8	9	A	B	C	D	E	F
0	NUL	SOH	STX	ETX	EOT	ENQ	ACK	BEL	BS	HT	LF	VT	FF	CR	SO	SI
1	DLE	DC1	DC2	DC3	DC4	NAK	SYN	ETB	CAN	EM	SUB	ESC	FS	GS	RS	US
2		!	"	#	$	%	&	'	(	)	*	+	,	-	.	/
3	0	1	2	3	4	5	6	7	8	9	:	;	<	=	>	?
4	@	A	B	C	D	E	F	G	H	I	J	K	L	M	N	O
5	P	Q	R	S	T	U	V	W	X	Y	Z	[	\	]	^	_
6	`	a	b	c	d	e	f	g	h	i	j	k	l	m	n	o
7	p	q	r	s	t	u	v	w	x	y	z	{	|	}	~	DEL

Words

- A word of the alphabet Σ is a sequence (list) of characters of Σ:

$$w = c_1 \cdots c_n \quad \text{with} \quad c_1, \ldots, c_n \in \Sigma. \tag{2}$$

- The empty word is written as

$$w = \varepsilon. \tag{3}$$

- The set of all words of an alphabet Σ is represented by Σ^*.
- In programming languages, words are also referred to as strings.
- Examples:
  1. Using the aforementioned set Σ_{bin}, we can define the words

$$w_1 = 01100 \quad \text{and} \quad w_2 = 11001 \quad \text{with} \quad w_1, w_2 \in \Sigma_{\text{bin}}^*. \tag{4}$$

  2. Using the aforementioned set Σ_{en}, we can define the word

$$w = \texttt{example} \quad \text{with} \quad w \in \Sigma_{\text{en}}^*. \tag{5}$$

Length, character access

- We refer to the length of a word w as $|w|$, e.g.:

$$w = \texttt{example} \quad \text{with} \quad w \in \Sigma^*_{\text{en}} \longrightarrow |w| = 7. \tag{6}$$

- We refer to the number of occurances of a symbol l in w as $|w|_l$, e.g.

$$|\texttt{example}|_{\texttt{e}} = 2 \tag{7}$$

and

$$|\texttt{example}|_{\texttt{k}} = 0 \tag{8}$$

- We access individual characters within words using the terminology $w[i]$ with $i \in \{1, 2, \cdots, |w|\}$, e.g.

$$\texttt{example}[4] = \texttt{m} \tag{9}$$

Concatenation

- We define the concatenation of the words $w_1, w_2, ..., w_n$ as

$$w = w_1 w_2 \cdots w_n. \tag{10}$$

- Concatenation example:

$$w_1 = \texttt{01} \quad \text{and} \quad w_2 = \texttt{10}$$

$$\longrightarrow$$

$$w_1 w_2 = \texttt{0110} \quad \text{and} \quad w_2 w_1 = \texttt{1001}. \tag{11}$$

Iterated concatenation – power of a word

- In the following, we will be frequently using the set of natural numbers

$$\mathbb{N} = \{0, 1, \cdots\}. \tag{12}$$

- The nth power of a word w concatenates the same word n times:

$$w^n = w^{n-1}w \quad \text{with} \quad w^0 = \varepsilon \quad \text{and} \quad n \in \mathbb{N}, n \neq 0. \tag{13}$$

Formal languages

- Given the alphabet Σ, we refer to a subset $L \subseteq \Sigma^*$ as a formal language.

Formal languages - examples (1)

- We define

$$L_{\mathbb{N}} = \{\mathtt{1}w | w \in \Sigma^*_{\text{bin}}\} \cup \{\mathtt{0}\}. \tag{14}$$

Then, $L_{\mathbb{N}}$ is the set of all those words that represent integers using the binary system (all words starting with $\mathtt{1}$ and the word $\mathtt{0}$. Hence, we have

$$\mathtt{100} \in L_{\mathbb{N}} \quad \text{but} \quad \mathtt{010} \notin L_{\mathbb{N}}. \tag{15}$$

Formal languages - examples (2)

- We define the function

$$d : L_{\mathbb{N}} \to \mathbb{N} \tag{16}$$

as the function returning the numeric value of a word in the language $L_{\mathbb{N}}$. This gives us

(a) $d(\mathtt{0}) = 0$,
(b) $d(\mathtt{1}) = 1$,
(c) $d(w\mathtt{0}) = 2d(w) \quad \text{for} \quad |w| > 0$,
(d) $d(w\mathtt{1}) = 2d(w) + 1 \quad \text{for} \quad |w| > 0$.

Formal languages - examples (3)

- We define the language $L_{\mathbb{P}}$ as the language representing prime numbers in the binary system:

$$L_{\mathbb{P}} = \{w \in L_{\mathbb{N}} | d(w) \in \mathbb{P}\}. \tag{17}$$

One way to formally express the set of all prime numbers is

$$\mathbb{P} = \{p \in \mathbb{N} | \{t \in \mathbb{N} | \exists k \in \mathbb{N} : kt = p\} = \{1, p\}\}. \tag{18}$$

Formal languages - examples (4)

- We define the language $L_C \subset \Sigma^*_{\text{ASCII}}$ as the set of all C functions with a declaration of the form

$$\texttt{char*}\ f(\texttt{char*}\ x); \tag{19}$$

that is, L_C contains the ASCII code of all those C functions processing and returning a string.

Formal languages - examples (5)

- Using the alphabet $\Sigma_{\text{ASCII}+} = \Sigma_{\text{ASCII}} \cup \{\dagger\}$, we define the universal language

$$L_u = \{f\dagger x\dagger y\} \quad \text{with} \tag{20}$$

  (a) $f \in L_C$,
  (b) $x, y \in \Sigma^*_{\text{ASCII}}$,
  (c) applying f to x terminates and returns y.

- These examples show that formal languages have a wide scope.
- Testing whether a word belongs to $L_{\mathbb{N}}$ is straightforward whereas the same test for $L_{\mathbb{P}}$ or L_C is more complicated.
- Later, we will see that there is no algorithm to do this test for L_u.

Abandon all hope…

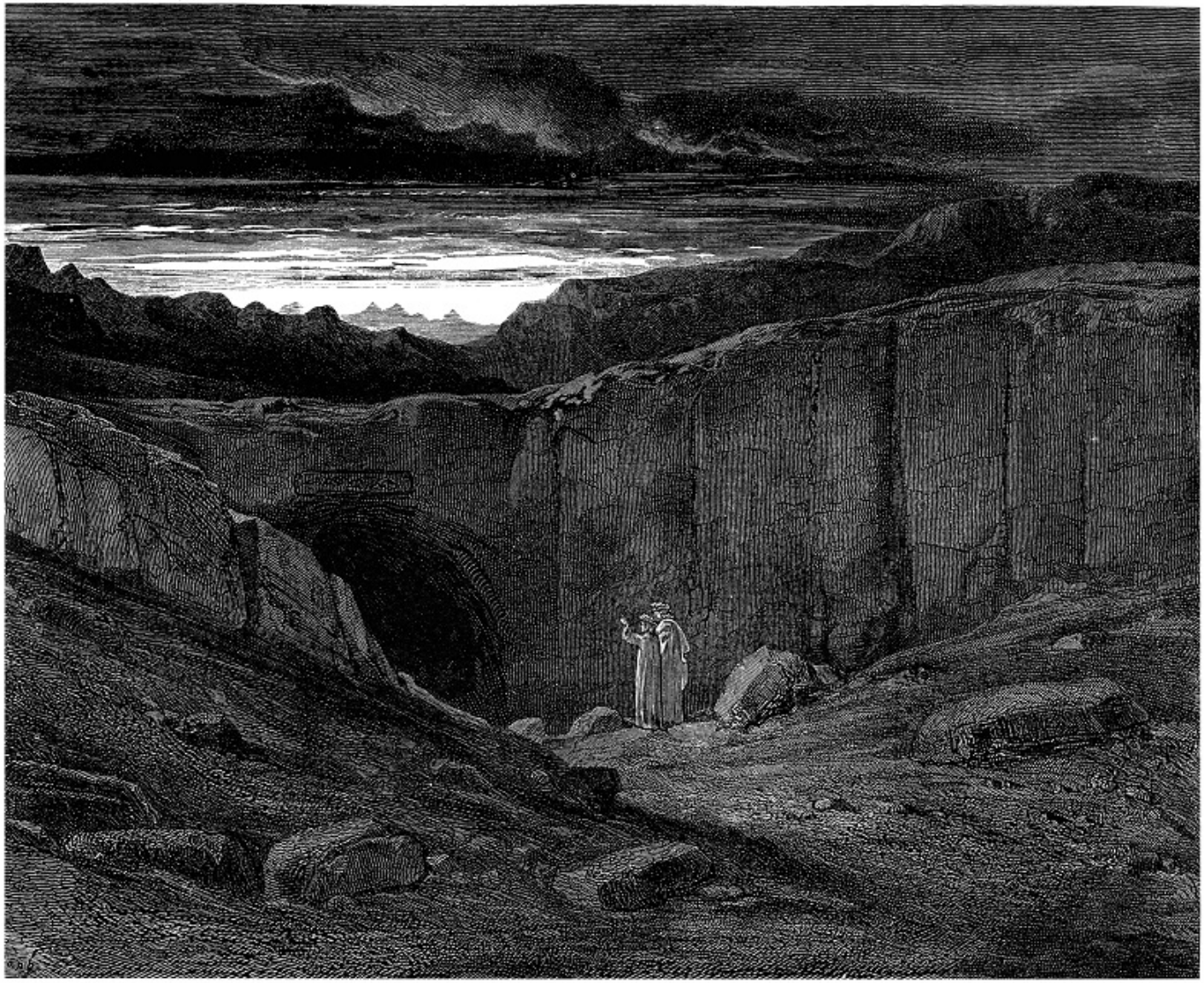

Product of a formal language

- Given an alphabet Σ and the formal languages $L_1, L_2 \subseteq \Sigma^*$, we define the product

$$L_1 \cdot L_2 = \{w_1 w_2 | w_1 \in L_1, w_2 \in L_2\}. \tag{21}$$

- Example:
  Using the alphabet Σ_{en}, we define the languages

$$L_1 = \{\texttt{ab}, \texttt{bc}\} \quad \text{and} \quad L_2 = \{\texttt{ac}, \texttt{cb}\}. \tag{22}$$

  The product is

$$L_1 \cdot L_2 = \{\texttt{abac}, \texttt{abcb}, \texttt{bcac}, \texttt{bccb}\}. \tag{23}$$

Power of a language

- Given an alphabet Σ, the formal language $L \subseteq \Sigma^*$, and the integer $n \in \mathbb{N}$, we define the nth power of L (recursively) as

$$L^n = L^{n-1} \cdot L \quad \text{with} \quad L^0 = \{\varepsilon\}. \tag{24}$$

- Using the alphabet Σ_{en}, we define the language

$$L = \{\texttt{ab}, \texttt{ba}\}. \tag{25}$$

This gives us

$$\begin{aligned} L^0 &= \{\varepsilon\}, \\ L^1 &= \{\varepsilon\} \cdot \{\texttt{ab}, \texttt{ba}\} = \{\texttt{ab}, \texttt{ba}\}, \\ L^2 &= \{\texttt{ab}, \texttt{ba}\} \cdot \{\texttt{ab}, \texttt{ba}\} = \{\texttt{abab}, \texttt{abba}, \texttt{baab}, \texttt{baba}\}. \end{aligned} \tag{26}$$

The Kleene Star

- Given an alphabet Σ and a formal language $L \subseteq \Sigma^*$, we define the Kleene star as
$$L^* = \bigcup_{n \in \mathbb{N}} L^n. \tag{27}$$
- Example:
Using the alphabet Σ_{en}, we define the language
$$L = \{\mathtt{a}\}. \tag{28}$$
This gives us
$$L^* = \{\mathtt{a}^n | n \in \mathbb{N}\}. \tag{29}$$

Formal languages: exercise

- Given the alphabet Σ_{bin} and the language

$$L = \{\mathtt{1}\}. \tag{30}$$

a) Formally describe the language

$$L' = L^* \backslash \{\varepsilon\}. \tag{31}$$

b) Formally describe the set

$$D = \{d(w) | w \in L'\}. \tag{32}$$

c) Formally describe the language

$$L'_- = \{w | d(w) - \mathtt{1} \in D\}. \tag{33}$$

d) Formally describe the language

$$L'_+ = \{w | d(w) + \mathtt{1} \in D\}. \tag{34}$$

Think!

Regular Expressions

Regular expressions

- Regular expressions
  - Compact way to represent a set of strings
  - Convenient way to represent a set of strings
- Widely used, e.g.
  - Characterize tokens for compilers
  - Describe search terms for a data base
  - Filter through genomic data
  - Extract URLs from web pages
  - Extract email addresses from web pages

The set of all regular expressions (over an alphabet) is a formal language

Each single regular expression describes a formal language

Regular expressions and formal languages

- Using the alphabet Σ, we refer to the set of all regular expressions as R.
- We introduce a function

$$L : R \to 2^{\Sigma^*} \tag{35}$$

  assigning a formal language $L(r) \subseteq \Sigma^*$ to each regular expression r.
- Here, 2^S denotes the power set of a set S.
- E.g.,

$$2^{\Sigma_{\text{bin}}} = 2^{\{0,1\}} = \{\emptyset, \{0\}, \{1\}, \{0,1\}\}, \tag{36}$$

  and

$$\begin{aligned} 2^{\Sigma^*_{\text{bin}}} &= 2^{\{\varepsilon,0,1,00,01,\ldots\}} \\ &= \{\emptyset, \{\varepsilon\}, \{0\}, \{1\}, \{00\}, \{01\}, \ldots \\ &\quad \ldots \{\varepsilon, 0\}, \{\varepsilon, 1\}, \{\varepsilon, 00\}, \{\varepsilon, 01\}, \ldots \\ &\quad \ldots \{010, 1110, 10101\}, \ldots\}. \end{aligned} \tag{37}$$

The set of regular expressions

- The set of regular expressions (R) is defined as follows:
  1. The regular expression $\emptyset$ is associated with the empty language:
  $$L(\emptyset) = \{\} \quad \text{with} \quad \emptyset \in R. \tag{38}$$
  2. The regular expression ε is associated with the language containing only the empty word:
  $$L(\varepsilon) = \{\varepsilon\} \quad \text{with} \quad \varepsilon \in R. \tag{39}$$
  3. Each symbol in the alphabet Σ is also a regular expression:
  $$c \in \Sigma \longrightarrow c \in R;$$
  $$L(c) = \{c\}. \tag{40}$$
  4. We define the infix operator "$+$" generating new regular expressions by merging the languages of the regular expressions r_1 and r_2:
  $$r_1 \in R, r_2 \in R \longrightarrow r_1 + r_2 \in R;$$
  $$L(r_1 + r_2) = L(r_1) \cup L(r_2). \tag{41}$$

The set of regular expressions (cont.)

5. We define the infix operator "·" generating new regular expressions using the product of the languages representing the regular expressions r_1 and r_2:

$$r_1 \in R, r_2 \in R \longrightarrow r_1 \cdot r_2 \in R;$$

$$L(r_1 \cdot r_2) = L(r_1) \cdot L(r_2). \tag{42}$$

6. We define the Kleene star of the language representing a regular expression r:

$$r \in R \longrightarrow r^* \in R;$$

$$L(r^*) = L^*(r). \tag{43}$$

7. Brackets can be used to group regular expressions without changing them:

$$r \in R \longrightarrow (r) \in R;$$

$$L((r)) = L(r). \tag{44}$$

Operator precedences

- To save brackets, we introduce the following operator precedences:
  I. "(", ")" (strongest)
  II. "$*$"
  III. "$\cdot$"
  IV. "$+$" (weakest)
- Example:

$$a + b \cdot c^* = a + (b \cdot (c^*)). \tag{45}$$

- For the sake of further simplicity, the product operator "$\cdot$" can also be omitted, e.g.:

$$a + b \cdot c^* = a + bc^*. \tag{46}$$

- Note: Some authors (and tools) use $|$ instead of $+$ to denote alternatives

Regular expressions: examples

- For all the following examples, we are using the alphabet

$$\Sigma_{\text{abc}} = \{\mathtt{a}, \mathtt{b}, \mathtt{c}\}. \tag{47}$$

1. The regular expression

$$r_1 = (\mathtt{a} + \mathtt{b} + \mathtt{c})(\mathtt{a} + \mathtt{b} + \mathtt{c}) \tag{48}$$

   describes all the words of exactly two symbols:

$$L(r_1) = \{w \in \Sigma^*_{\text{abc}} \big| |w| = 2\}. \tag{49}$$

2. The regular expression

$$r_2 = (\mathtt{a} + \mathtt{b} + \mathtt{c})(\mathtt{a} + \mathtt{b} + \mathtt{c})^* \tag{50}$$

   describes all the words of one or more symbols:

$$L(r_1) = \{w \in \Sigma^*_{\text{abc}} \big| |w| \geq 1\}. \tag{51}$$

Regular expressions: exercises

a) Using the alphabet $\Sigma_{\text{abc}} = \{\texttt{a}, \texttt{b}, \texttt{c}\}$, give a regular expression r_a for all the words $w \in \Sigma_{\text{abc}}^*$ containing exactly one $\texttt{a}$ or exactly one $\texttt{b}$.

b) Which language is expressed by r_a?

c) Using the alphabet $\Sigma_{\text{abc}} = \{\texttt{a}, \texttt{b}, \texttt{c}\}$, give a regular expression r_b for all the words containing at least one $\texttt{a}$ and one $\texttt{b}$.

d) Using the alphabet $\Sigma_{\text{bin}} = \{\texttt{0}, \texttt{1}\}$, give a regular expression for all the words whose third last symbol is $\texttt{1}$.

e) Using the alphabet Σ_{bin}, give a regular expression for all the words not containing the string $\texttt{110}$.

f) Which language is expressed by the regular expression

$$r_f = (\texttt{1} + \varepsilon)(\texttt{00}^*\texttt{1})^*\texttt{0}^*? \tag{52}$$

Think!

Homework assignment

- Install an operational UNIX/Linux environment (per slide 7) on your computer.
- To test you installation, download and execute the program `miu.py` from the course web page `http://wwwlehre.dhbw-stuttgart.de/~sschulz/fla2014.html`
- Read the source code of the program. What does it do? Try different parameter combinations.

Review of Goals

- Getting acquainted
- Practical issues
- Course outline and motivation
- Basics of formal languages
- Regular expressions

Feedback round

- What was the best part of todays lecture?
- What part of todays lecture has the most potential for improvement?
  - Optional: how would you improve it?

Introduction Review

Goals for Today

- Review and mental warm-up
- Proofs
- Regular expression algebra
- Deterministic finite automata

Formal languages: Basics

- Alphabet Σ: Finite, nonempty set of characters (symbols/letters)
- Words: Finite sequences of characters
  - ε is the empty word ($|\varepsilon| = 0$)
  - $abcab[3] = c$
  - $|abcab|_a = 2$
- Σ^*: Set of all words over Σ
- A formal language L over Σ is a (finite or infinite) set of words $L \subseteq \Sigma^*$

Formal languages: Warm-up

- Give 5 examples each of formal languages with a suitable alphabet from the areas of
  - Computer programming
  - Human communication
  - Data/knowledge collections
- Formally describe the following languages (if they are languages):
  - The set of all square numbers in decimal representation
  - The set of all square roots of natural numbers in decimal representation

Regular expressions: Basics

- Elementary REs (over a given alphabet Σ)
  - $L(\emptyset) = \{\}$
  - $L(\varepsilon) = \{\varepsilon\}$
  - $L(a) = \{a\}$ for $a \in \Sigma$
- Composite REs (with existing REs r, r_1, r_2):
  - $L(r_1 + r_2) = L(r_1) \cup L(r_2)$
  - $L(r_1 \cdot r_2) = L(r_1) \cdot L(r_2)$
  - $L(r^*) = L^*(r) (= \cup_{i \in \mathbb{N}} L^i(r_1))$
- Parentheses can be used to group subexpressions
- Operator precedence: $() > * > \cdot > +$

Regular expressions: Warm-up

- Characterise the languages described by the following REs over $\Sigma = \{0, 1\}$:
  - $(0 + 1)^* 111 (0 + 1)(0 + 1)$
  - $(ba)^*(a + b)^*(ab)^*$
- Find regular expressions for the following languages over $\Sigma = \{a, b\}$ (if possible):
  - $\{w \in \Sigma^* \mid w \text{ contains } ab\}$
  - $\{w \in \Sigma^* \mid |w| \geq 3 \text{ and } w[3] = a\}$
  - $\{w \in \Sigma^* \mid |w| < 3 \text{ or } w[2] = w[|w| - 2] = a\}$
  - $\{a^n b^m \mid n, m \in \mathbb{N}\}$
  - $\{a^n b^n \mid n \in \mathbb{N}\}$
  - $\{a^n a^n \mid n \in \mathbb{N}\}$

Excursion: proofs

A proof is a (semi-)formal argument that necessarily convinces an open-minded, rational, educated being of the truth of a statement.

- argument – a chain of logically connected steps
- necessarily – the argument is sound and complete
- open-minded – the recipient must be willing to consider the argument
- rational – the recipient must be able to follow the logic
- educated – the recipient must understand the concepts involved

Corollary: The form of a (semi-formal) proof depends on the audience!

More on Regular Expressions

Equivalence of regular expressions

- We define two regular expressions r_1 and r_2 as equivalent, if $L(r_1) = L(r_2)$.
- In that case, we write $r_1 \doteq r_2$.
- Formally:

$$r_1 \doteq r_2 \text{ if and only if } L(r_1) = L(r_2) \tag{53}$$

Algebraic operations on regular expressions

1. $r_1 + r_2 \doteq r_2 + r_1$ (commutative law)
   This equivalence can be proven using the commutativity of set union:

$$L(r_1 + r_2) = L(r_1) \cup L(r_2) = L(r_2) \cup L(r_1) = L(r_2 + r_1). \tag{54}$$

2. $(r_1 + r_2) + r_3 \doteq r_1 + (r_2 + r_3)$ (associative law)
3. $(r_1 r_2) r_3 \doteq r_1 (r_2 r_3)$ (associative law)
4. $\emptyset r \doteq \emptyset$
5. $\varepsilon r \doteq r$
6. $\emptyset + r \doteq r$
7. $(r_1 + r_2) r_3 \doteq r_1 r_3 + r_2 r_3$ (distributive law)
8. $r_1 (r_2 + r_3) \doteq r_1 r_2 + r_1 r_3$ (distributive law)

Algebraic operations on regular expressions: proof of Rule 4

- We want to prove that

$$\emptyset r \doteq \emptyset. \tag{55}$$

- According to Equation 53, to prove Equation 55, we have to show that

$$L(\emptyset r) = L(\emptyset). \tag{56}$$

One way to do so is:

$$\begin{aligned} L(\emptyset r) &\overset{\text{Eq.42}}{=} L(\emptyset) \cdot L(r) \\ &\overset{\text{Eq.38}}{=} \emptyset \cdot L(r) \\ &\overset{\text{Eq.21}}{=} \{w_1 w_2 | w_1 \in \emptyset, w_2 \in L(r)\} \\ &= \emptyset \\ &\overset{\text{Eq.38}}{=} L(\emptyset) \end{aligned} \tag{57}$$

$\square$

Algebraic operations on regular expressions (cont.)

9. $r + r \doteq r$
10. $(r^*)^* \doteq r^*$
11. $\emptyset^* \doteq \varepsilon$
12. $\varepsilon^* \doteq \varepsilon$
13. $r^* \doteq \varepsilon + r^* r$
14. $r^* \doteq (\varepsilon + r)^*$
15. $\varepsilon \notin L(s)$ and $r \doteq rs + t \longrightarrow r \doteq ts^*$
    (proof by Arto Salomaa)
16. $a^* a \doteq aa^*$ (see *Lemma: Kleene Star* below)
17. $\varepsilon \notin L(s)$ and $r \doteq sr + t \longrightarrow r \doteq s^* t$ (*Arden's Lemma*)

Algebraic operations on regular expressions: exercise

a) Simplify the following regular expression:

$$r = \mathtt{0}(\varepsilon + \mathtt{0} + \mathtt{1})^* + (\varepsilon + \mathtt{1})(\mathtt{1} + \mathtt{0})^* + \varepsilon. \tag{58}$$

b) Prove the equivalence using only algebraic operations

$$r^* \doteq \varepsilon + r^*. \tag{59}$$

c) Prove the equivalence using only algebraic operations

$$\mathtt{10}(\mathtt{10})^* \doteq \mathtt{1}(\mathtt{01})^*\mathtt{0}. \tag{60}$$

Group exercise: being Arto Salomaa

- Prove: $\varepsilon \notin L(s)$ and $r \doteq rs + t \longrightarrow r \doteq ts^*$
- Group phase (groups of 3-4, 5-10 minutes)
- Discussion
- Group phase (5-10 minutes)
- Proof assembly

Finite Automata/Finite State Machines

Finite Automata: Motivation

- Simple model of computation
- Can recognize/identify regular languages
- Equivalent to regular expressions
  - We can automatically generate a FA from a RE
  - We can automatically generate an RE from an FA
- Deterministic (DFA, now) and non-deterministic (NFA, later) variants
- Easy to implement in actual programs

Deterministic Finite Automata: Idea

- Automaton is in one of a finite number of states
- Words processed letter by letter
- State transitions triggered by letters read
- Words are accepted or rejected based on final state reached

DFA: Example

- A simple DFA recognizing the regular expression `a*ba*`

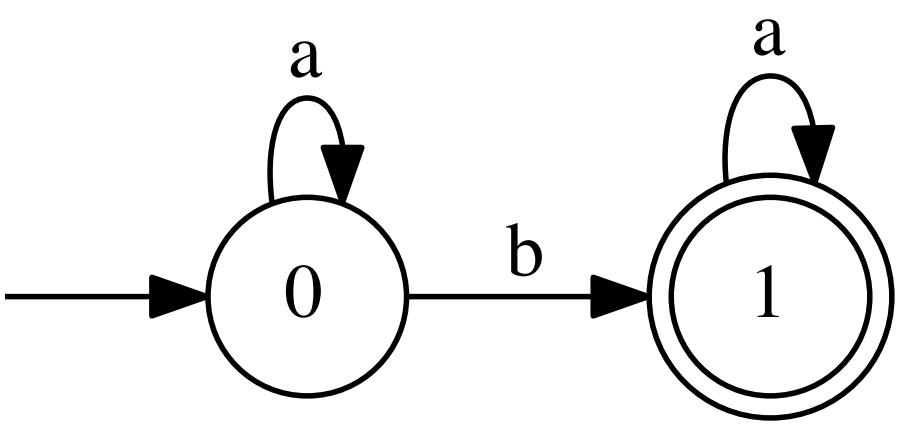

- This DFA has two states, 0 and 1.
- 0 is the initial state (with an arrow "pointing at it from anywhere" (Sipser, 2006))
- 1 is an accepting state (represented as a double circle)

DFA: formal definition

- A deterministic finite automaton (DFA) is a quintuple

$$A = \langle Q, \Sigma, \delta, q_0, F \rangle \tag{61}$$

with the following components

1. Q is the finite set of states.
2. Σ is the input alphabet.
3. $\delta : Q \times \Sigma \to Q \cup \{\Omega\}$ is the state-transition function. If $\delta(q, c) = \Omega$, the DFA announces an error, i.e. rejects the input.
4. $q_0 \in Q$ is the initial state.
5. $F \subseteq Q$ is the set of final (or accepting) states.

DFA: formal definition: example

- Using the previous example, the DFA is expressed as

$$A = \langle Q, \Sigma, \delta, q_0, F \rangle \qquad (62)$$

with

1. $Q = \{0, 1\}$
2. $\Sigma = \{\mathtt{a}, \mathtt{b}\}$
3. $\delta(0, \mathtt{a}) = 0; \delta(0, \mathtt{b}) = 1;$
   $\delta(1, \mathtt{a}) = 1; \delta(1, \mathtt{b}) = \Omega$
4. $q_0 = 0$
5. $F = \{1\}$

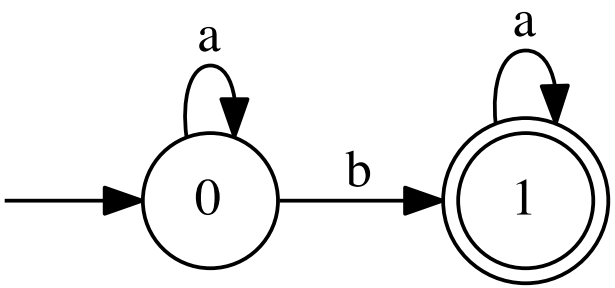

Language accepted by an DFA

- In order to formally define the language accepted by an DFA, we generalize the state transition function δ to a function

$$\delta' : Q \times \Sigma^* \to Q \cup \{\Omega\} \tag{63}$$

  whose second argument is a string.
- We define
  - $\delta'(q, \varepsilon) = q$
  - $\delta'(q, w) = \begin{cases} \delta'(\delta(q, c), v) & \text{if} \quad \delta(q, c) \neq \Omega \\ \Omega & \text{otherwise} \end{cases}$

    with $\quad w = cv; c \in \Sigma; v \in \Sigma^* \quad$ for $\quad |w| > 0$
- The language accepted by a DFA $A = \langle Q, \Sigma, \delta, q_0, F \rangle$ is defined as

$$L(A) = \{w \in \Sigma^* | \delta'(q_0, w) \in F\}. \tag{64}$$

DFA: exercise (1)

1. We are given this graphical representation of a DFA A:

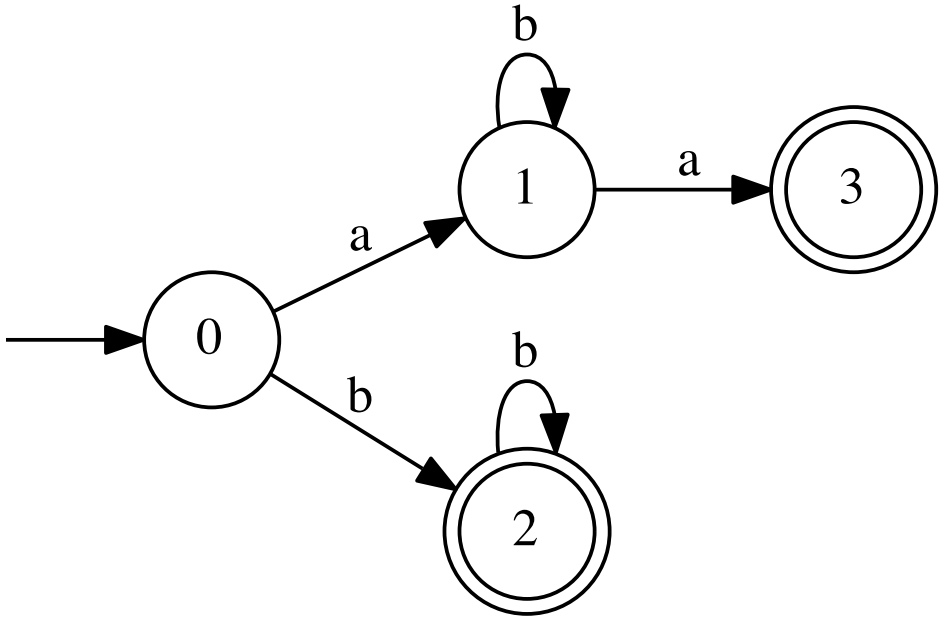

   a) Give a regular expression describing $L(A)$.
   b) Give a formal definition of A.

DFA: exercise (2)

2. Give
   - a regular expression,
   - a graphical representation, and
   - a formal definition

   of a DFA A whose language $L(A) \subset \{\mathtt{a}, \mathtt{b}\}^*$ contains all those words featuring the substring $\mathtt{ab}$

   a) at the beginning,
   b) at arbitrary position,
   c) at the end.

DFA: another example

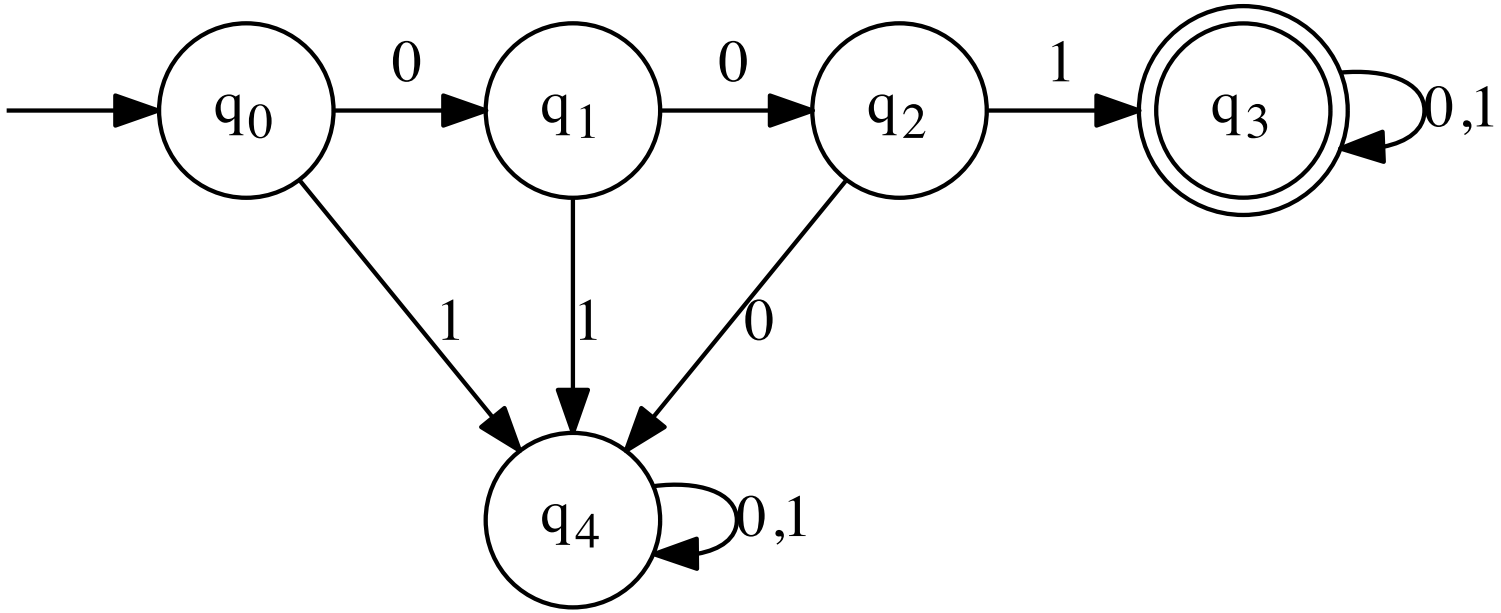

- Which language is recognized by the DFA?

DFA: Tabular representation

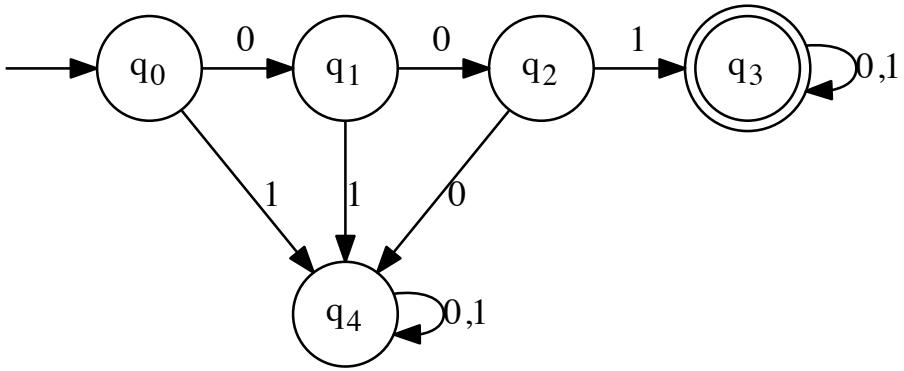

- $A = \langle Q, \Sigma, \delta, q_0, F \rangle$
  - $Q = \{q_0, q_1, q_2, q_3, q_4\}$
  - $\Sigma = \{0, 1\}$
  - Initial state: q_0
  - $F = \{q_3\}$

		δ	0	1
$\rightarrow$	q_0	q_0	q_1	q_4
	q_1	q_1	q_2	q_4
	q_2	q_2	q_4	q_3
$*$	q_3	q_3	q_3	q_3
	q_4	q_4	q_4	q_4

DFA: Tabular representation in practice

```
 Delta | 0   1
---------------
-> q0  | q1 q4
   q1  | q2 q4
   q2  | q4 q3
*  q3  | q3 q3
   q4  | q4 q4
```

```
> easim.py fsa001.txt 10101
Processing:  10101
q0 :: 1 -> q4
q4 :: 0 -> q4
q4 :: 1 -> q4
q4 :: 0 -> q4
q4 :: 1 -> q4
Rejected

> easim.py fsa001.txt 101
Processing:  101
q0 :: 1 -> q4
q4 :: 0 -> q4
q4 :: 1 -> q4
Rejected
```

DFAs in tabular form: exercise

- Give the following DFA . . .
  - as a formal 5-tuple
  - as a diagram

```
parity    | 0    1
---------------------
->  even  | even odd
*   odd   | odd  even
```

- Characterize the language accepted by the DFA

Homework assignment

- Write (in a language of your choice) a program that reads a finite automaton in tabular form from a file (name given on the command line) and simulates its processing of a word (also given on the command line). Example files for input and output are given on the course web site, `http://wwwlehre.dhbw-stuttgart.de/~sschulz/fla2014.html`
- Deadline: Next session (2014-10-01!)

Review of Goals

- Review and mental warm-up
- Proofs
- Regular expression algebra
- Deterministic finite automata

Feedback round

- What was the best part of todays lecture?
- What part of todays lecture has the most potential for improvement?
  - Optional: how would you improve it?

Goals for Today

- Refresh Deterministic Finite Automata
- Discuss homework and open points
- Non-determinstic FAs

Regular expression algebra

Definition: $r_1 \doteq r_2$ iff $L(r_1) = L(r_2)$

1. $r_1 + r_2 \doteq r_2 + r_1$
2. $(r_1 + r_2) + r_3 \doteq r_1 + (r_2 + r_3)$
3. $(r_1 r_2) r_3 \doteq r_1 (r_2 r_3)$
4. $\emptyset r \doteq \emptyset$
5. $\varepsilon r \doteq r$
6. $\emptyset + r \doteq r$
7. $(r_1 + r_2) r_3 \doteq r_1 r_3 + r_2 r_3$
8. $r_1 (r_2 + r_3) \doteq r_1 r_2 + r_1 r_3$
9. $r + r \doteq r$
10. $(r^*)^* \doteq r^*$
11. $\emptyset^* \doteq \varepsilon$
12. $\varepsilon^* \doteq \varepsilon$
13. $r^* \doteq \varepsilon + r^* r$
14. $r^* \doteq (\varepsilon + r)^*$
15. $\varepsilon \notin L(s)$ and $r \doteq rs + t \longrightarrow r \doteq ts^*$

Open exercise

Simplify the following regular expression:

$$r = \mathtt{0}(\varepsilon + \mathtt{0} + \mathtt{1})^* + (\varepsilon + \mathtt{1})(\mathtt{1} + \mathtt{0})^* + \varepsilon$$

Lemma: Kleene Star

Lemma:

$$a^* a \doteq a a^* \tag{65}$$

Proof: By case distinction.

Case 1: $\varepsilon \in L(a)$. We show $L(a^* a) = L(a^*) = L(a a^*)$

a. $L(a^* a) \subseteq L(a^*)$ by definition
b. $L(a^* a) = \{uv | u \in L(a^*), v \in L(a)\}$
$\supseteq \{uv | u \in L(a^*), v = \varepsilon\}$
$= \{u | u \in L(a^*)\}$
$= L(a^*)$

- a. und b. imply $L(a^* a) = L(a^*)$
- $L(a a^*) = L(a^*)$: Strictly analoguous
- Hence case 1 holds.

Lemma: Kleene Star

Case 2: $\varepsilon \notin L(a)$. Then

$$
\begin{array}{rcll}
a^*a & \doteq & (\varepsilon + a^*a)a & \text{(by 13. } a^* \doteq \varepsilon + a^*a\text{)} \\
 & \doteq & (a^*a + \varepsilon)a & \text{(by 1. } r_1 + r_2 \doteq r_2 + r_1\text{)} \\
 & \doteq & a^*aa + a & \text{(by 7. } (r_1 + r_2)r_3 \doteq r_1r_3 + r_2r_3\text{)} \\
 & \doteq & aa^* & \text{(by 15. with } r = a^*a, s = a, t = a\text{)}
\end{array}
$$

Since cases 1 and 2 hold, the lemma holds. q.e.d.

Solution to open exercise

$$
\begin{aligned}
r &= 0(\varepsilon + 0 + 1)^* + (\varepsilon + 1)(1 + 0)^* + \varepsilon \\
&\overset{14,1}{\doteq} 0(0 + 1)^* + (\varepsilon + 1)(0 + 1)^* + \varepsilon \\
&\overset{7}{\doteq} 0(0 + 1)^* + \varepsilon(0 + 1)^* + 1(0 + 1)^* + \varepsilon \\
&\overset{5}{\doteq} 0(0 + 1)^* + (0 + 1)^* + 1(0 + 1)^* + \varepsilon \\
&\overset{1,7}{\doteq} \varepsilon + (0 + 1)(0 + 1)^* + (0 + 1)^* \\
&\overset{\text{Eq.65}}{\doteq} \varepsilon + (0 + 1)^*(0 + 1) + (0 + 1)^* \\
&\overset{13}{\doteq} (0 + 1)^* + (0 + 1)^* \\
&\overset{9}{\doteq} (0 + 1)^*.
\end{aligned}
$$

DFAs

- $A = \langle Q, \Sigma, \delta, q_0, F \rangle$ with
  1. $Q = \{0, 1\}$
  2. $\Sigma = \{\mathtt{a}, \mathtt{b}\}$
  3. $\delta(0, \mathtt{a}) = 0; \delta(0, \mathtt{b}) = 1;$
     $\delta(1, \mathtt{a}) = 1; \delta(1, \mathtt{b}) = \Omega$
  4. $q_0 = 0$
  5. $F = \{1\}$
- $L(A) = \{w \in \Sigma^* | \delta'(q_0, w) \in F\}$

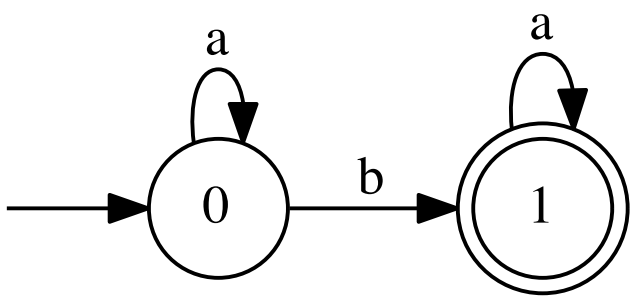

δ	a	b
$\rightarrow 0$	0	1
$*1$	1	Ω

DFA warmup exercise

- Assume
  - $\Sigma = \{a, b, c\}$
  - $L_1 = \{ubw | u \in \Sigma^*, w \in \Sigma\}$
  - $L_2 = \{ubw | u \in \Sigma, w \in \Sigma^*\}$
- Group 1 (your family name starts with A-M):
  Find a DFA A with $L(A) = L_1$
- Group 2 (your family name does not start with A-M):
  Find a DFA A with $L(A) = L_2$

Homework Assignment

- Write (in a language of your choice) a program that reads a finite automaton in tabular form from a file (name given on the command line) and simulates its processing of a word (also given on the command line).

```
 A3      |  0  1
-----------------
-> * q0 | q1  q2
     q1 | q0  q3
     q2 | q3  q0
     q3 | q2  q1
```

```
> ./easim.py ea03.txt 100010
Processing:  100010
q0 :: 1 -> q2
q2 :: 0 -> q3
q3 :: 0 -> q2
q2 :: 0 -> q3
q3 :: 1 -> q1
q1 :: 0 -> q0
Accepted
```

Student Experiences?

Language of (my) choice: Python

- Modern scripting language, widely used
- Good collection of built-in abstract data types
  - Lists/arrays/stacks/queues
  - Dictionaries/hashes
  - Sets
- Object-oriented features
  - Classes, objects
  - Inheritance
- Functional features
  - Functions as first-class members
  - map and lambda
- Good library support
  - Strings and regexps
  - “All of UNIX/POSIX”

Python peculiarities

- Statement blocks marked by indentation

```
for c in string:
    newstate = self.delta_fun(state, c)
    print state, "::", c, "->", newstate
    state=newstate
```

- Methods use explicit `self` parameter

```
def delta_fun(self, state, letter):
    return self.delta[(state, letter)]


...
newstate = self.delta_fun(state, c)
```

DFAs in Python

- DFA is a class
  - Individual DFAs are objects/instances
  - Class constructor extracts DFA from string table
- Direkt mapping of $A = \langle Q, \Sigma, \delta, q_0, F \rangle$
  - Q: Python set `states`
  - Σ: Python list `sigma`
  - δ: Python dictionary `delta` mapping `(q, c)` onto successor state
    - Also exposed as a method `delta_fun`
  - q_0: Python variable `start`
  - F: Python set `accept`

DFAs in Python – structure

```
class DFA(object):
    """
    Object representing a (deterministic) finite automaton
    """

    def __init__(self, spec):
        ...

    def delta_fun(self, state, letter):
        ...
    def proc_string(self, string):
        ...
    def parse(self, spec):
        ...
    def __str__(self):
        ...
    def dotify(self):
        ...
```

DFAs in Python – constructor

```
def __init__(self, spec):
    self.states = set()
    self.sigma  = []
    self.delta  = {}
    self.start  = None
    self.accept = set()
    self.parse(spec)
```

DFAs in Python – processing

```
def delta_fun(self, state, letter):
    return self.delta[(state, letter)]

def proc_string(self, string):
    print "Processing: ", string

    state = self.start
    for c in string:
        newstate = self.delta_fun(state, c)
        print state, "::", c, "->", newstate
        state=newstate

    if state in self.accept:
        print "Accepted\n"
    else:
        print "Rejected\n"
```

DFAs in Python – main

```
if __name__ == '__main__':
    opts, args = getopt.gnu_getopt(sys.argv[1:], "hdp", ["
    # Options and error-handling omitted
    file = open(args[0], "r")
    str  = file.read()
    file.close()

    ea = DFA(str)

    ....

    for arg in args[1:]:
        ea.proc_string(arg)
```

DFAs in Python – parsing (1)

```
def parse(self, spec):
    lines = spec.split("\n")
    # Find sigma
    while True:
        i = lines.pop(0)
        l=i.strip()
        if l:
            sigmastr = l.split("|")[1]
            self.sigma = sigmastr.split()
            break
    # Skip ----------
    while True:
        i = lines.pop(0)
        l=i.strip()
        if l:
            break
    ...
```

DFAs in Python – parsing (2)

```
# Process the rest - "(->)?(*)? state | state1 ... staten
while lines:
    i = lines.pop(0)
    l=i.strip()
    if l:
        state, values = l.split("|")
        state = state.strip()
        start  = False
        accept = False
        if state.startswith("->"):
            start = True
            state = state[2:].strip()
        if state.startswith("*"):
            accept = True
            state = state[1:].strip()
```

DFAs in Python – parsing (3)

```
...
self.states.add(state)
if start:
    self.start = state
if accept:
    self.accept.add(state)
dvals = values.split()
for i in xrange(len(self.sigma)):
    self.delta[(state, self.sigma[i])] = dvals[i]
```

Non-determinism

Non-Deterministic FAs – motivation (1)

- So far, we have discussed deterministic FAs, i.e. every state has exactly one transition for every possible input.
- Often, DFAs can be rather complex as in the following example accepting a language specified by the regular expression

$$(\mathtt{a} + \mathtt{b})^*\mathtt{b}(\mathtt{a} + \mathtt{b})(\mathtt{a} + \mathtt{b}) \tag{66}$$

Non-Deterministic FAs – motivation (2)

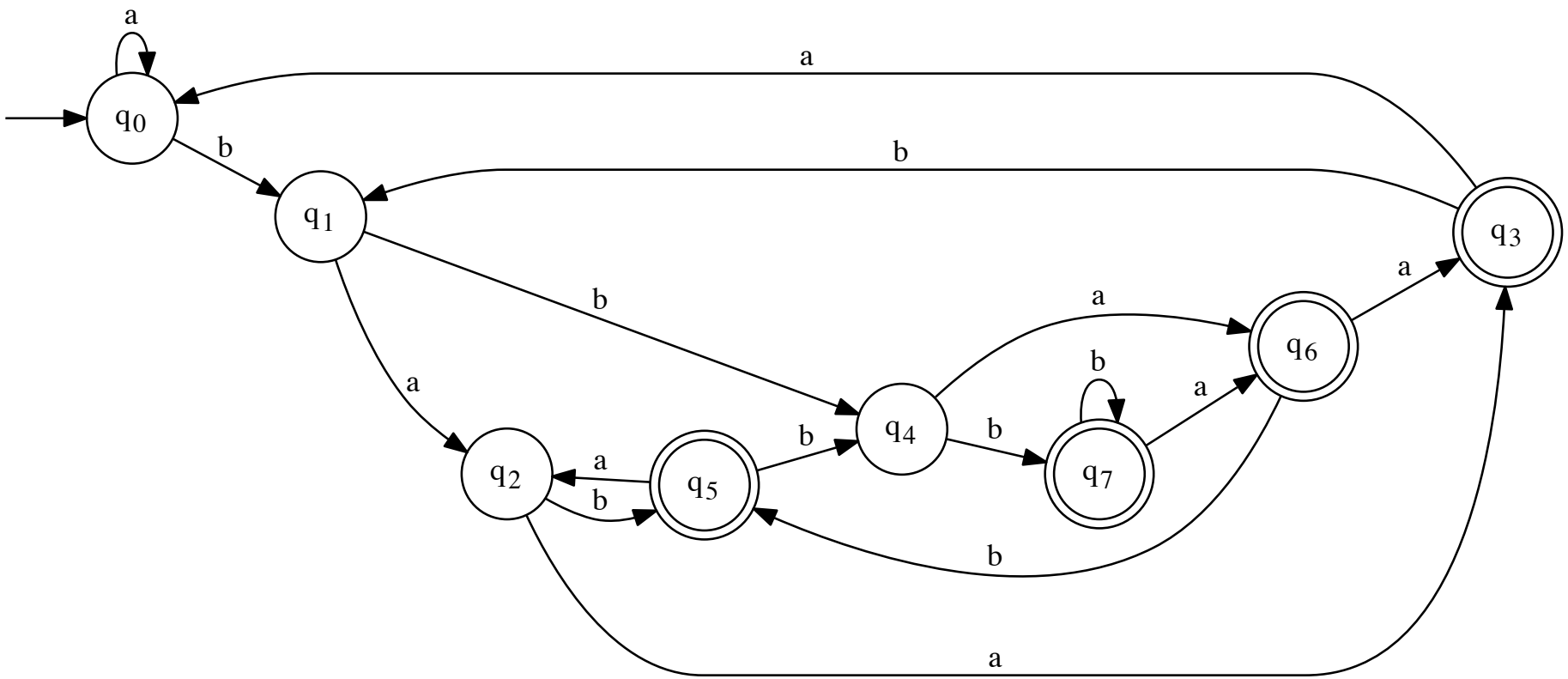

Non-Deterministic FAs – motivation (3)

- We can simplify such an FA if we permit that an input can lead to
  - one transition,
  - multiple transitions, or
  - no transition.
- That is, an FA selects its next state from a set of states where the set depends on the current state and the input.
- We call this a non-deterministic finite automaton (NFA)
- For the same example with the regular expression

$$(\mathtt{a} + \mathtt{b})^*\mathtt{b}(\mathtt{a} + \mathtt{b})(\mathtt{a} + \mathtt{b}) \tag{67}$$

...

Non-Deterministic FAs – motivation (4)

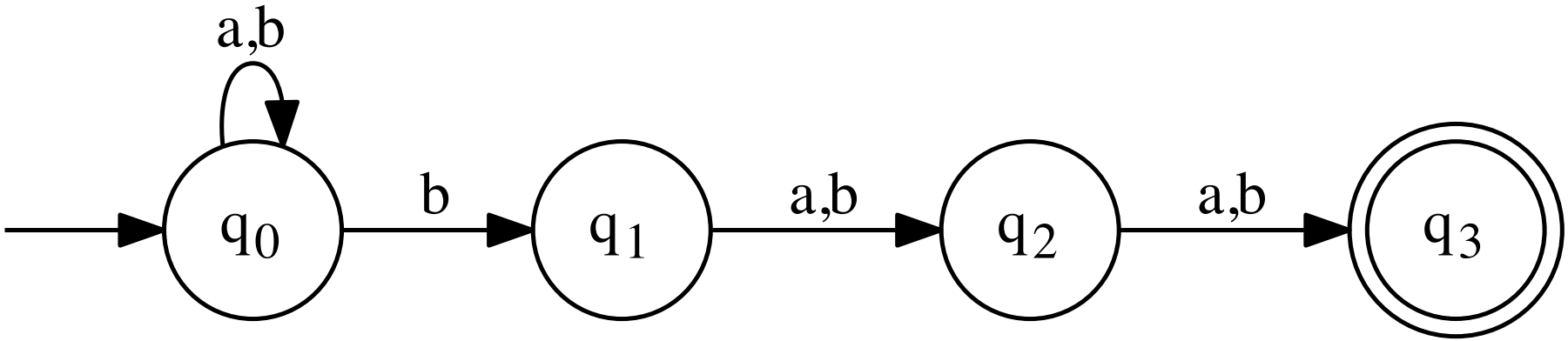

- This FA is non-deterministic, since, in state q_0 with the input `b`, the FA has to "guess" the next state.
- An example string `abab` can be read in three ways:
  1. $q_0 \overset{a}{\mapsto} q_0 \overset{b}{\mapsto} q_0 \overset{a}{\mapsto} q_0 \overset{b}{\mapsto} q_0$ (failure)
  2. $q_0 \overset{a}{\mapsto} q_0 \overset{b}{\mapsto} q_0 \overset{a}{\mapsto} q_0 \overset{b}{\mapsto} q_1$ (failure)
  3. $q_0 \overset{a}{\mapsto} q_0 \overset{b}{\mapsto} q_1 \overset{a}{\mapsto} q_2 \overset{b}{\mapsto} q_3$ (success)
- An NFA accepts a string, if one of the possible computations leads to an accepting state!

NFA: non-deterministic transitions and ε-transitions

- Non-deterministic transitions allow an NFA to go to more than one successor state
  - δ is a transition relation, not a transition function
- In addition to allow the automaton to go to more than one state on a given symbol, we also allow it to change state without reading a symbol:

$$q_1 \overset{\varepsilon}{\mapsto} q_2. \tag{68}$$

  - This is called the spontaneous transition or ε-transition
  - Thus, δ is a relation on $Q \times (\Sigma \cup \{\varepsilon\}) \times Q$

NFA remark

- Even though NFAs seem to be based on guessing, in the following, we will see that they are exactly as powerful as DFAs. We can generate an equivalent DFA from any NFA!

NFA: Formal definition

- An NFA is a quintuple

$$A = \langle Q, \Sigma, \delta, q_0, F \rangle \tag{69}$$

with the following components

1. Q is the finite set of states.
2. Σ is the input alphabet.
3. δ is a relation on $Q \times (\Sigma \cup \{\varepsilon\}) \times Q$. I.e.,

$$\delta \subseteq Q \times (\Sigma \cup \{\varepsilon\}) \times Q \tag{70}$$

4. $q_0 \in Q$ is the initial state.
5. $F \subseteq Q$ is the set of final states.

NFA: formal definition: example

- The above mentioned NFA example is expressed as

$$A = \langle Q, \Sigma, \delta, q_0, F \rangle \tag{71}$$

with

1. $Q = \{q_0, q_1, q_2, q_3\}$
2. $\Sigma = \{\mathtt{a}, \mathtt{b}\}$
3. $\delta =$
   $\{\langle q_0, \mathtt{a}, q_0\rangle, \langle q_0, \mathtt{b}, q_0\rangle, \langle q_0, \mathtt{b}, q_1\rangle,$
   $\langle q_1, \mathtt{a}, q_2\rangle, \langle q_1, \mathtt{b}, q_2\rangle,$
   $\langle q_2, \mathtt{a}, q_3\rangle, \langle q_2, \mathtt{b}, q_3\rangle\}$
4. Initial state q_0
5. $F = \{q_3\}$

NFA: exercise

- Develop an NFA A whose language $L(A) \subset \{\mathtt{a}, \mathtt{b}\}^*$ contains all those words featuring the substring $\mathtt{aba}$. Give:
  - a regular expression representing $L(A)$,
  - a graphical representation of A,
  - a formal definition of A

Equivalence of DFA and NFA

- Now we want to show that an NFA A can be transformed to a DFA $\det(A)$ sharing the same language, i.e.

$$L(A) = L(\det(A)) \tag{72}$$

- The core idea is that the states of $\det(A)$ are sets of states of A
- Deterministic transistions in $det(A)$ simulate transistions in A
- A set M of states of A is a final state of $\det(A)$ if M contains a final state of A.
- To show this, we define three auxiliary functions.
  - ε closure
  - Successor states function δ^*
  - Extended transition function Δ^* for NFAs

NFA: ε closure

- The ε closure
$$ec : Q \to 2^Q \tag{73}$$
returns the set of all states the NFA can change to by means of an ε transition coming from state q.
- Formal definition: ec is the smallest function with the properties:
$$q \in ec(q); \tag{74}$$
$$p \in ec(q) \wedge \langle p, \varepsilon, r \rangle \in \delta \quad \to \quad r \in \ ec(q). \tag{75}$$

NFA: ε closure example (1)

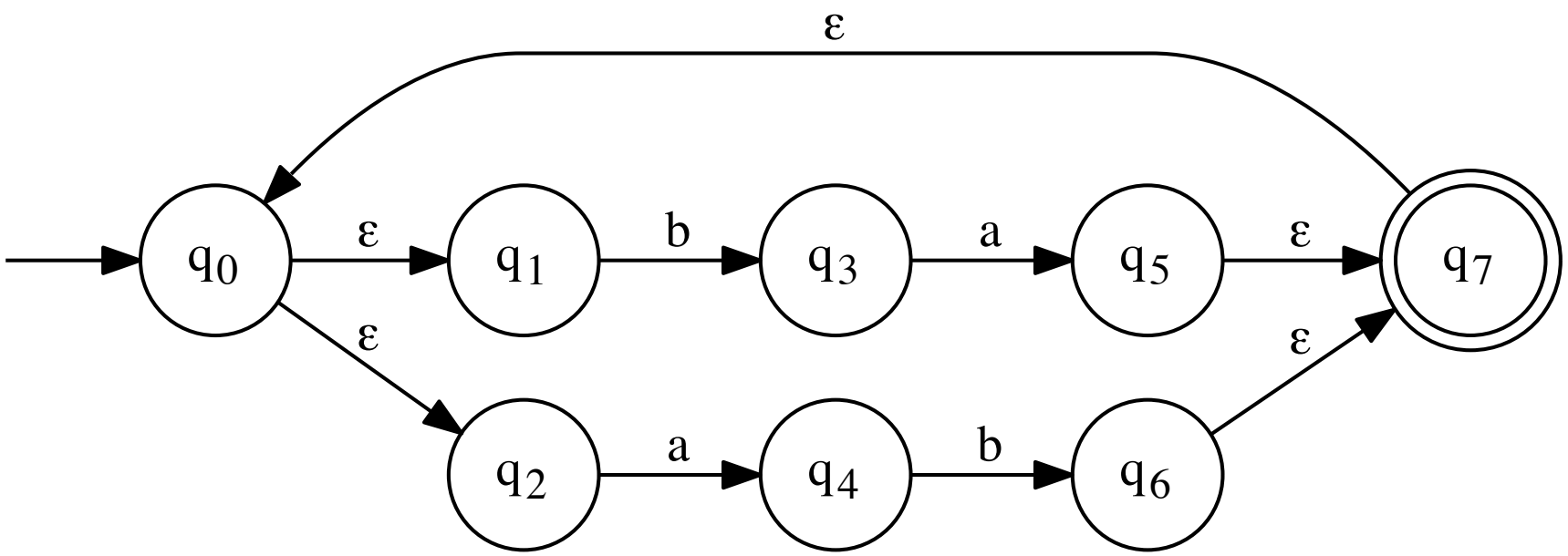

NFA: ε closure example (2)

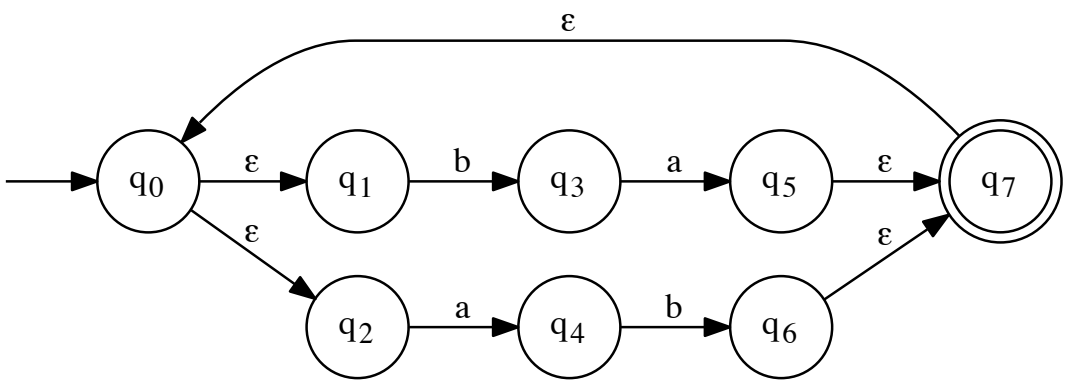

- calculating the ε closure for all states:
  - $ec(q_0) = \{q_0, q_1, q_2\}$,
  - $ec(q_1) = \{q_1\}$,
  - $ec(q_2) = \{q_2\}$,
  - $ec(q_3) = \{q_3\}$,
  - $ec(q_4) = \{q_4\}$,
  - $ec(q_5) = \{q_5, q_7, q_0, q_1, q_2\}$,
  - $ec(q_6) = \{q_6, q_7, q_0, q_1, q_2\}$.
  - $ec(q_7) = \{q_7, q_0, q_1, q_2\}$.

Successor state function for NFAs (1)

- Second, we transform the relation δ into a function

$$\delta^* : Q \times \Sigma \to 2^Q. \tag{76}$$

- Here, $\delta^*(q, c)$ returns the set of all states the NFA can change to coming from state q reading the symbol c followed by any number of ε transitions.
- Formally, we have

$$\delta^*(q_1, c) = \bigcup_{q_2 \in Q:\ \langle q_1, c, q_2 \rangle \in \delta} ec(q_2). \tag{77}$$

Successor state function for NFAs (2)

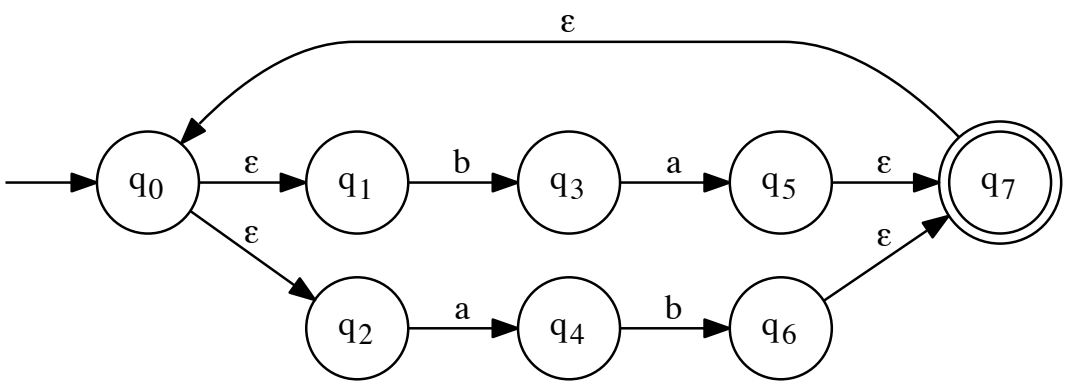

$$\delta^*(q_1, c) = \bigcup_{q_2 \in Q:\ \langle q_1, c, q_2 \rangle \in \delta} ec(q_2)$$

- examples (based on the above NFA):
  1. $\delta^*(q_0, \mathtt{a}) = \{\}$,
  2. $\delta^*(q_1, \mathtt{b}) = \{q_3\}$,
  3. $\delta^*(q_3, \mathtt{a}) = \{q_5, q_7, q_0, q_1, q_2\}$.

Extended transition function Δ^*

- Third, we transform the function δ^* into a function

$$\Delta^* : 2^Q \times \Sigma \to 2^Q. \tag{78}$$

- Here, $\Delta^*(M, c)$ returns the set of all states the NFA can change to coming from a set of states M reading the symbol c followed by any number of ε transitions.
- Formally, we have

$$\Delta^*(M, c) = \bigcup_{q \in M} \delta^*(q, c). \tag{79}$$

- examples (based on the above NFA):
  1. $\Delta^*(\{q_0, q_1, q_2\}, \mathtt{a}) = \{q_4\}$,
  2. $\Delta^*(\{q_3\}, \mathtt{a}) = \{q_5, q_7, q_0, q_1, q_2\}$,
  3. $\Delta^*(\{q_3\}, \mathtt{b}) = \{\}$,

Equivalence of DFA and NFA: formal definition

- We are now ready to transform an NFA A into a DFA:

$$\det(A) = \langle 2^Q, \Sigma, \Delta^*, ec(q_0), \hat{F} \rangle \tag{80}$$

with

$$\hat{F} = \{M \in 2^Q | M \cap F \neq \{\}\}. \tag{81}$$

- That is, the set of final states $\hat{F}$ is the set of all subsets of Q containing a final state.

Equivalence of DFA and NFA: example (1)

- returning to the example FSM expressing the regular expression

$$(\mathtt{a}+\mathtt{b})^*\mathtt{b}(\mathtt{a}+\mathtt{b})(\mathtt{a}+\mathtt{b}) \tag{82}$$

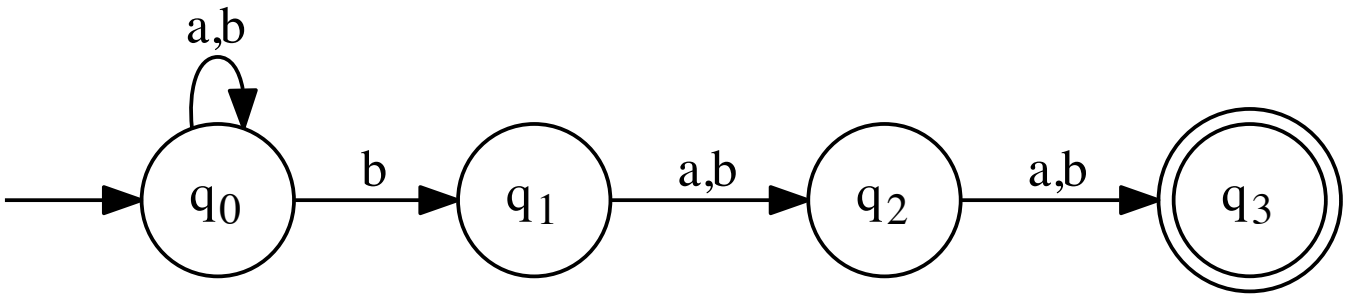

- The initial state:

$$S_0 = ec(q_0) = \{q_0\}. \tag{83}$$

- The state transition function: Starting with the initial state...
  - $\Delta^*(\{q_0\}, \mathtt{a}) = \{q_0\} = S_0$.

Equivalence of DFA and NFA: example (2)

- exploring the set of states...
  - $S_1 = \Delta^*(\{q_0\}, \mathtt{b}) = \{q_0, q_1\}$.
  - $S_2 = \Delta^*(\{q_0, q_1\}, \mathtt{a}) = \{q_0, q_2\}$.
  - $S_4 = \Delta^*(\{q_0, q_1\}, \mathtt{b}) = \{q_0, q_1, q_2\}$
  - $S_3 = \Delta^*(\{q_0, q_2\}, \mathtt{a}) = \{q_0, q_3\}$.
  - $S_5 = \Delta^*(\{q_0, q_2\}, \mathtt{b}) = \{q_0, q_1, q_3\}$.
  - $S_6 = \Delta^*(\{q_0, q_1, q_2\}, \mathtt{a}) = \{q_0, q_2, q_3\}$.
  - $S_7 = \Delta^*(\{q_0, q_1, q_2\}, \mathtt{b}) = \{q_0, q_1, q_2, q_3\}$.

Equivalence of DFA and NFA: example (3)

- transitions with repetitive states...
  - $\Delta^*(\{q_0, q_3\}, \mathtt{a}) = \{q_0\} = S_0$.
  - $\Delta^*(\{q_0, q_3\}, \mathtt{b}) = \{q_0, q_1\} = S_1$.
  - $\Delta^*(\{q_0, q_1, q_3\}, \mathtt{a}) = \{q_0, q_2\} = S_2$.
  - $\Delta^*(\{q_0, q_1, q_3\}, \mathtt{b}) = \{q_0, q_1, q_2\} = S_4$.
  - $\Delta^*(\{q_0, q_2, q_3\}, \mathtt{a}) = \{q_0, q_3\} = S_3$.
  - $\Delta^*(\{q_0, q_2, q_3\}, \mathtt{b}) = \{q_0, q_1, q_3\} = S_5$.
  - $\Delta^*(\{q_0, q_1, q_2, q_3\}, \mathtt{a}) = \{q_0, q_2, q_3\} = S_6$.
  - $\Delta^*(\{q_0, q_1, q_2, q_3\}, \mathtt{b}) = \{q_0, q_1, q_2, q_3\} = S_7$.

Equivalence of DFA and NFA: example (4)

- Now, we can define the DFA

$$\det(A) = \langle \hat{Q}, \Sigma, \Delta^*, S_0, \hat{F} \rangle \tag{84}$$

with

- the set of states

$$\hat{Q} = \{S_0, \cdots, S_7\}, \tag{85}$$

- the state transition function Δ^* as summarized as follows:

Δ^*	S_0	S_1	S_2	S_3	S_4	S_5	S_6	S_7
a	S_0	S_2	S_3	S_0	S_6	S_2	S_3	S_6
b	S_1	S_4	S_5	S_1	S_7	S_4	S_5	S_7

- and the set of final states (each DFA state containing the NFA final state q_3)

$$\hat{F} = \{S_3, S_5, S_6, S_7\}. \tag{86}$$

Equivalence of DFA and NFA: example (5)

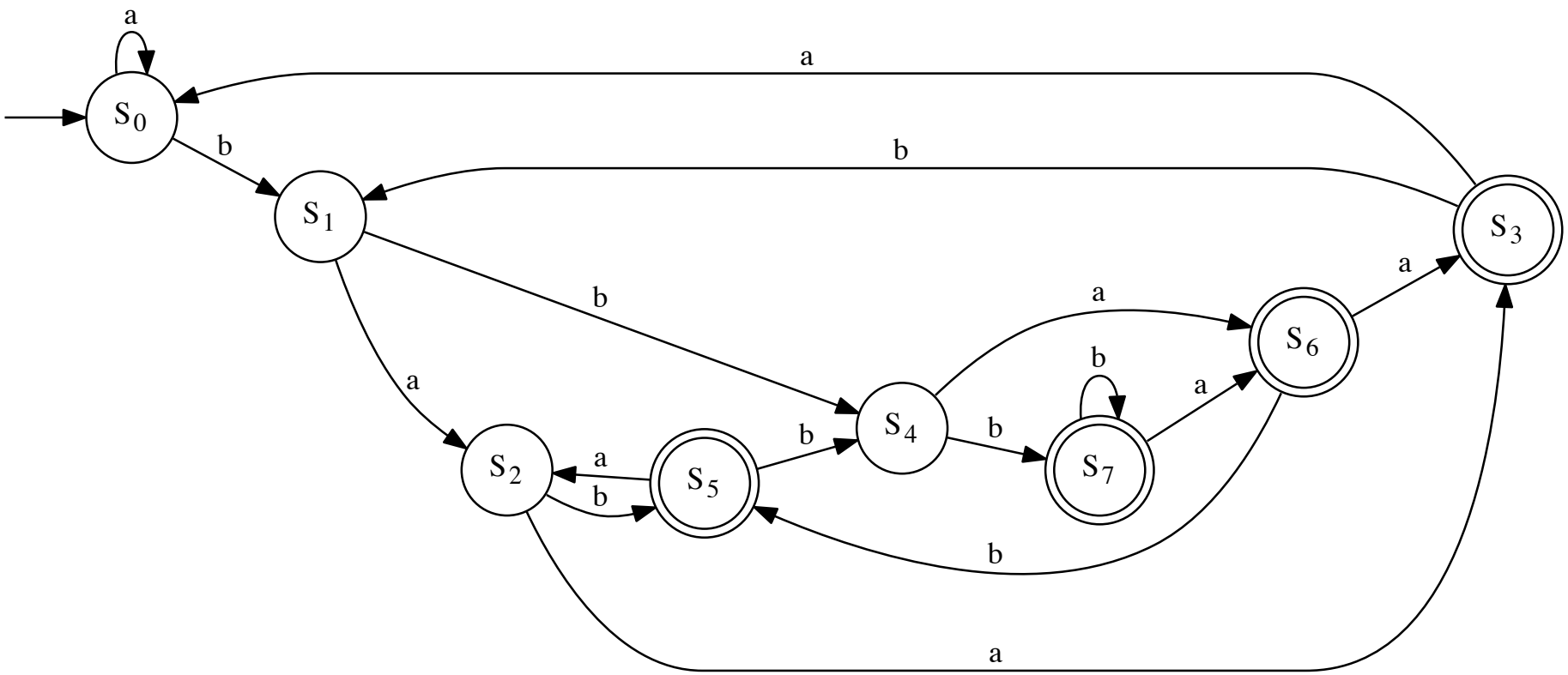

Equivalence of DFA and NFA: exercise

- We are given the following NFA A:

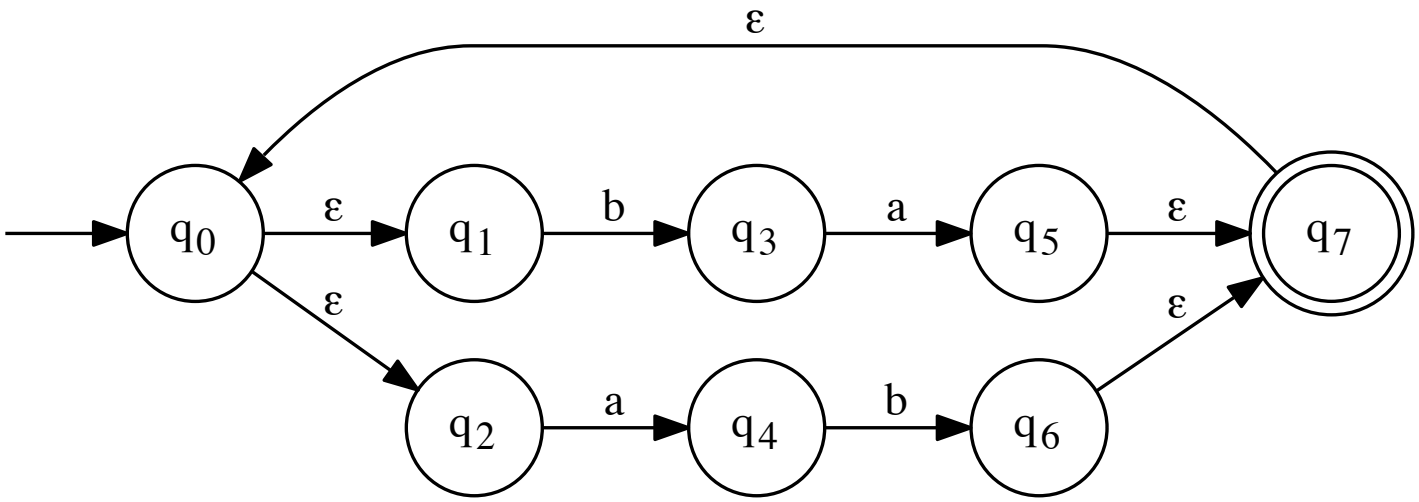

a) Determine det(A).

b) Draw det(A)'s graphical representation

c) Give a regular expression representing the same language as A.

Solution to exercise (1)

- Incremental computation of $\hat{Q}$ and Δ^*:
  - Initial state $S_0 = ec(q_0) = \{q_0, q_1, q_2\}$
  - $\Delta^*(S_0, a) = \delta^*(q_0, a) \cup \delta^*(q_1, a) \cup \delta^*(q_2, a) = \{\} \cup \{\} \cup \{q_4\} = \{q_4\} = S_1$
  - $\Delta^*(S_0, b) = \{q_3\} = S_2$
  - $\Delta^*(S_1, a) = \{\} = S_3$
  - $\Delta^*(S_1, b) = ec(q_6) = \{q_6, q_7, q_0, q_1, q_2\} = S_4$
  - $\Delta^*(S_2, a) = \{q_5, q_7, q_0, q_1, q_2\} = S_5$
  - $\Delta^*(S_2, b) = \{\} = S_3$
  - $\Delta^*(S_3, a) = \{\} = S_3$
  - $\Delta^*(S_3, b) = \{\} = S_3$
  - $\Delta^*(S_4, a) = \{q_4\} = S_1$
  - $\Delta^*(S_4, b) = \{q_3\} = S_2$
  - $\Delta^*(S_5, a) = \{q_4\} = S_1$
  - $\Delta^*(S_5, b) = \{q_3\} = S_2$
- $\hat{F} = \{S_4, S_5\}$ (since $q_7 \in S_4, q_7 \in S_5$)

Solution to exercise (2)

- $det(A) = \langle \hat{Q}, \Sigma, \Delta^*, S_0, \hat{F} \rangle$
  - $\hat{Q} = \{S_0, S_1, S_2, S_3, S_4, S_5\}$
  - $\hat{F} = \langle S_4, S_5 \}$
  - Δ^* given by the table below

Δ^*	a	b
$\rightarrow S_0$	S_1	S_2
S_1	S_3	S_4
S_2	S_5	S_3
S_3	S_3	S_3
$*S_4$	S_1	S_2
$*S_5$	S_1	S_2

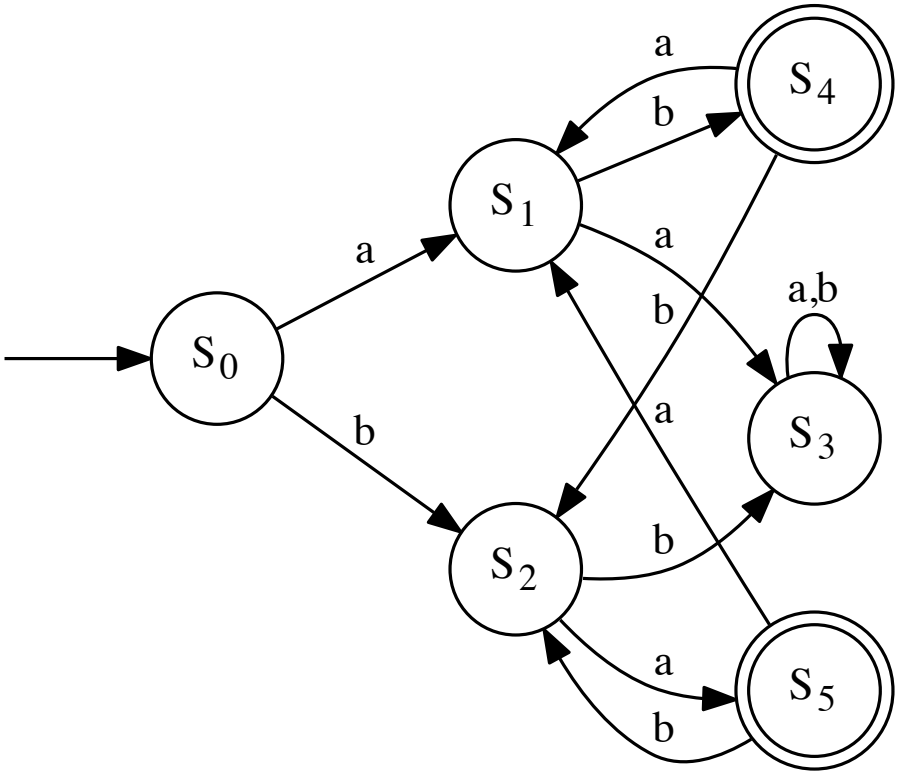

- RE:
  $L(A) = L((ab + ba)(ab + ba)^*)$

Review of Goals

- Refresh Deterministic Finite Automata
- Discuss homework and open points
- Non-determinstic FAs

Feedback round

- What was the best part of todays lecture?
- What part of todays lecture has the most potential for improvement?
  - Optional: how would you improve it?

Goals for Today

- Refresh and warm-up
- Completing the circle
  - REs can be simulated by NFAs
  - DFAs can be simulated by REs
- Minimization of DFAs

Refresher: NFAs

- NFA $A = \langle Q, \Sigma, \delta, q_0, F \rangle$
  1. Q is the finite set of states.
  2. Σ is the input alphabet.
  3. δ is a relation on $Q \times (\Sigma \cup \{\varepsilon\}) \times Q$
  4. $q_0 \in Q$ is the initial state.
  5. $F \subseteq Q$ is the set of final states.
- Significant differences to DFAs:
  - δ is a relation - the automaton can change to multiple successor states
  - δ allows for ε-transistion - it can change states spontaneously
- NFAs can be simulared by DFAs
  - States of $det(A)$ are sets of states of A
  - Δ^* goes from sets of A-states to sets of A
    - ...by combining the transistion of the individual states
    - ...and taking the ε-closure

Warmup: NFA to DFA transformation

- Convert the following NFA (over $\Sigma = \{a, b\}$) into an equivalent DFA:

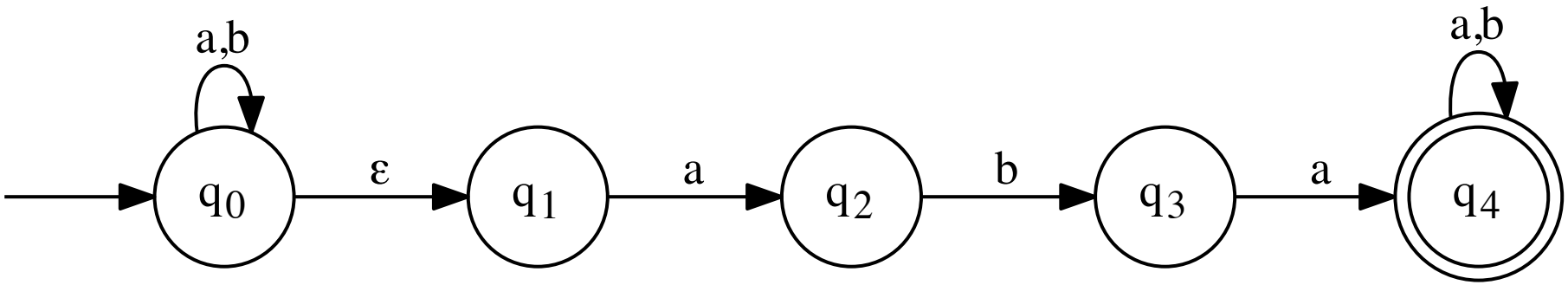

Regular expressions and NFAs

Regular expressions and Finite Automata

- Regular expressions describe regular languages
  - For each regular language L, there is an regular expression r with $L(r) = L$
  - For every regular expression r, $L(r)$ is a regular language
- Finite automata describe regular languages
  - For each regular language L, there is a FA A with $L(A) = L$
  - For every finite automaton A, $L(A)$ is a regular language
- We will now (constructively) show this equivalence between REs and FAs
  - We already know that DFAs and NFAs are equivalent
  - Now: Equivalence of NFAs and REs

Transformation of regular expressions into NFAs

- Given a regular expression r, we want to derive an NFA $A(r)$ accepting the same language:

$$L(A(r)) = L(r). \tag{87}$$

- Ideas:
  - We construct NFAs for the elementary REs ($\emptyset, \varepsilon, c \in \Sigma$)
  - We combine NFAs for subexpressions to generate NFAs for composite regular expressions
- All NFAs we construct have a number of special properties:
  - There are no transitions to the initial state.
  - There is only a single final state.
  - There are no transitions from the final state.

We can easily achieve this with ε-transitions!

Reminder: Regular Expression

Let Σ be an alphabet.

- The elementary regular expressions over Σ are:
  - $\emptyset$ with $L(\emptyset) = \emptyset$
  - ε with $L(\varepsilon) = \{\varepsilon\}$
  - $c \in \Sigma$ with $L(c) = \{c\}$
- Assume r_1 and r_2 are regular expressions over Σ. Then the following are also regular expressions over Σ:
  - $r_1 + r_2$ with $L(r_1 + r_2) = L(r_1) \cup L(r_2)$
  - $r_1 \cdot r_2$ with $L(r_1 \cdot r_2) = L(r_1) \cdot L(r_2)$
  - r_1^* with $L(r_1^*) = L(r_1)^*$

NFAs for elementary REs

- Assuming Σ is the alphabet which r is based on, we define
  1. $A(\emptyset) = \langle \{q_0, q_1\}, \Sigma, \{\}, q_0, \{q_1\} \rangle$

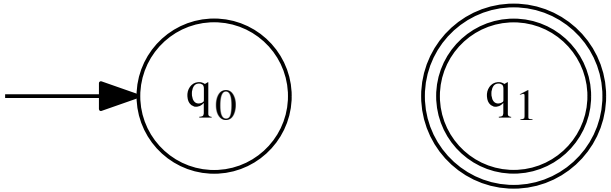

  2. $A(\epsilon) = \langle \{q_0, q_1\}, \Sigma, \{\langle q_0, \varepsilon, q_1 \rangle\}, q_0, \{q_1\} \rangle$

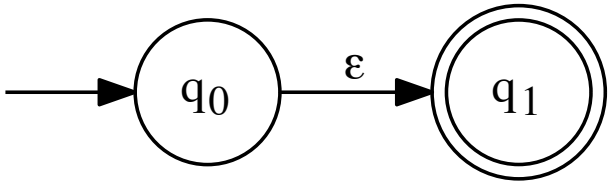

  3. $A(c) = \langle \{q_0, q_1\}, \Sigma, \{\langle q_0, c, q_1 \rangle\}, q_0, \{q_1\} \rangle$ for all $c \in \Sigma$

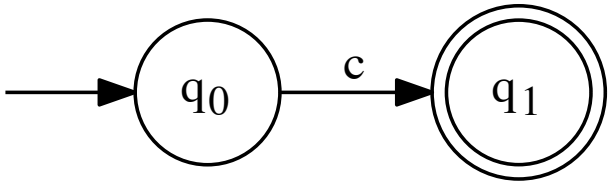

NFAs for composite REs (general)

- In the following we assume:
  - $A(r_1) = \langle Q_1, \Sigma, \delta_1, q_1, \{q_2\} \rangle$
  - $A(r_2) = \langle Q_2, \Sigma, \delta_2, q_3, \{q_4\} \rangle$
  - $Q_1 \cap Q_2 = \emptyset$
  - $q_0, q_5 \notin Q_1 \cup Q_2$
- We visualise an NFA for RE r_1 by a square box with two explicit states
  - The initial state is on the left
  - The unique accepting state on the right
  - All other states and transitions are implicit
  - We mark initial/accepting states only for the composite automaton

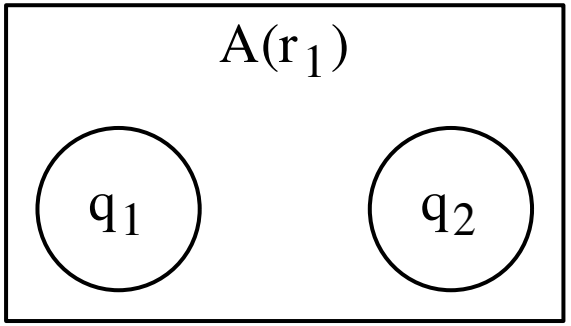

NFAs for composite REs (concatenation)

4. $A(r_1 r_2) = \langle Q_1 \cup Q_2, \Sigma, \{\langle q_2, \varepsilon, q_3 \rangle\} \cup \delta_1 \cup \delta_2, q_1, \{q_4\} \rangle$

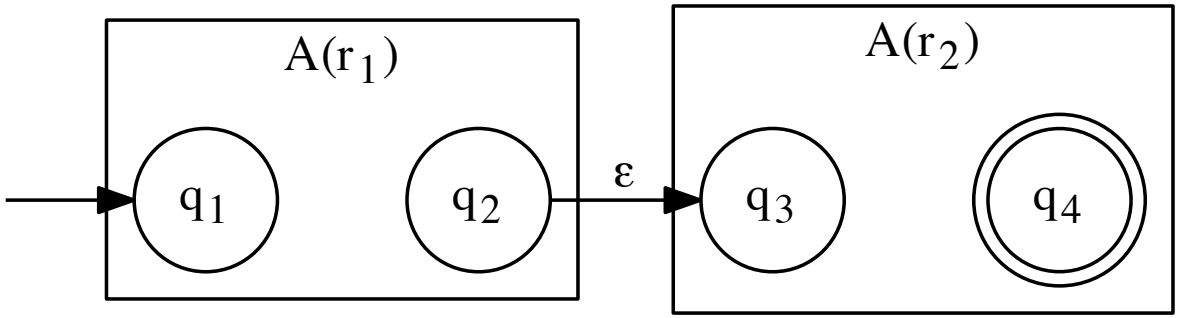

Reminder:

- $A(r_1) = \langle Q_1, \Sigma, \delta_1, q_1, \{q_2\} \rangle$
- $A(r_2) = \langle Q_2, \Sigma, \delta_2, q_3, \{q_4\} \rangle$

NFAs for composite REs (alternatives)

5. $A(r_1 + r_2) = \langle \{q_0, q_5\} \cup Q_1 \cup Q_2, \Sigma,$
$\{\langle q_0, \varepsilon, q_1\rangle, \langle q_0, \varepsilon, q_3\rangle, \langle q_2, \varepsilon, q_5\rangle, \langle q_4, \varepsilon, q_5\rangle\} \cup \delta_1 \cup \delta_2, q_0, \{q_5\}\rangle$

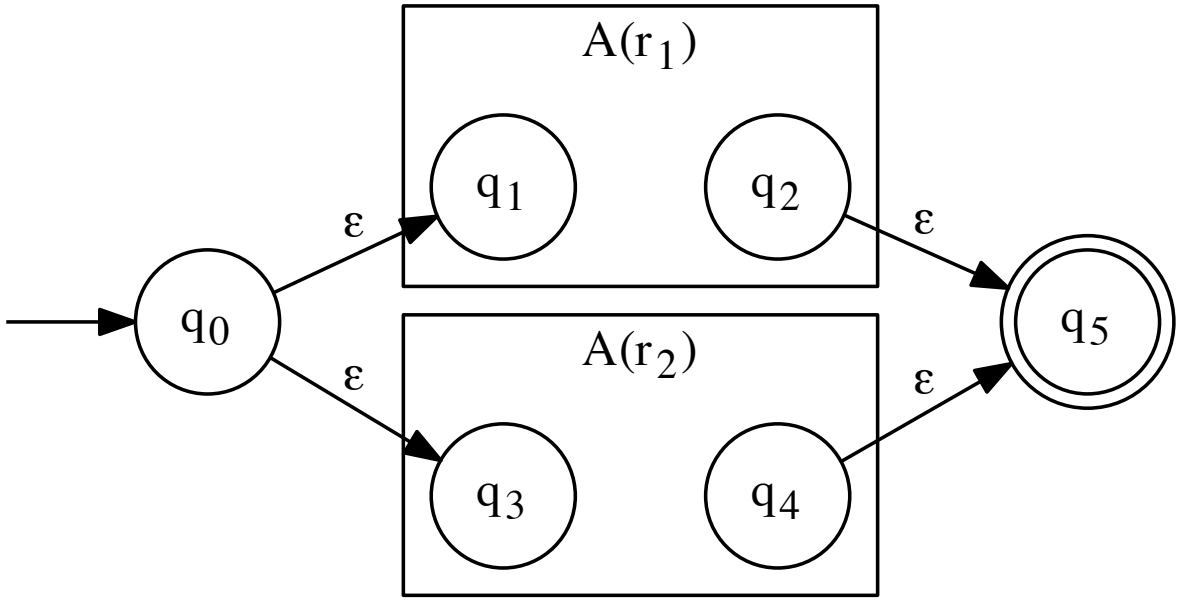

Reminder:

- $A(r_1) = \langle Q_1, \Sigma, \delta_1, q_1, \{q_2\}\rangle$
- $A(r_2) = \langle Q_2, \Sigma, \delta_2, q_3, \{q_4\}\rangle$

NFAs for composite REs (Kleene Star)

6. $A(r_1^*) = \langle \{q_0, q_5\} \cup Q_1, \Sigma,$
$\{\langle q_0, \varepsilon, q_1\rangle, \langle q_2, \varepsilon, q_1\rangle, \langle q_0, \varepsilon, q_5\rangle, \langle q_2, \varepsilon, q_5\rangle\} \cup \delta_1, q_0, \{q_5\}\rangle$

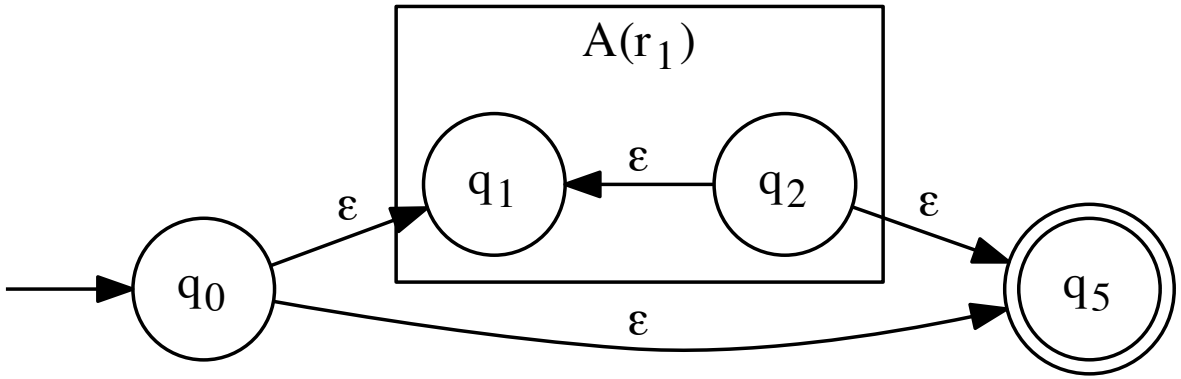

Reminder:

- $A(r_1) = \langle Q_1, \Sigma, \delta_1, q_1, \{q_2\}\rangle$

Fact: NFAs can simulate REs

- The previous construction produces for each regular expression r an NFA A with $L(A) = L(r)$

Corollary: Every language described by a regular expression can be accepted by a non-deterministic finite automaton

Transformation of regular expressions into NFAs: exercise

- Determine an NFA accepting the same language as the regular expression

$$(\mathtt{a} + \mathtt{b})\mathtt{a}^*\mathtt{b} \tag{88}$$

DFAs and Regular expressions

Overview and orientation

- We have claimed that NFAs, DFAs and REs all describe the same class of regular languages
- We have learned how to convert
  - regular expressions to equivalent NFAs
  - NFAs to equivalent DFAs
  - (DFAs to equivalent NFAs)

Todo: convert DFA to equivalent RE

- Given an DFA A, we want to derive a regular expression $r(A)$ accepting the same language:

$$L(r(A)) = L(A) \tag{89}$$

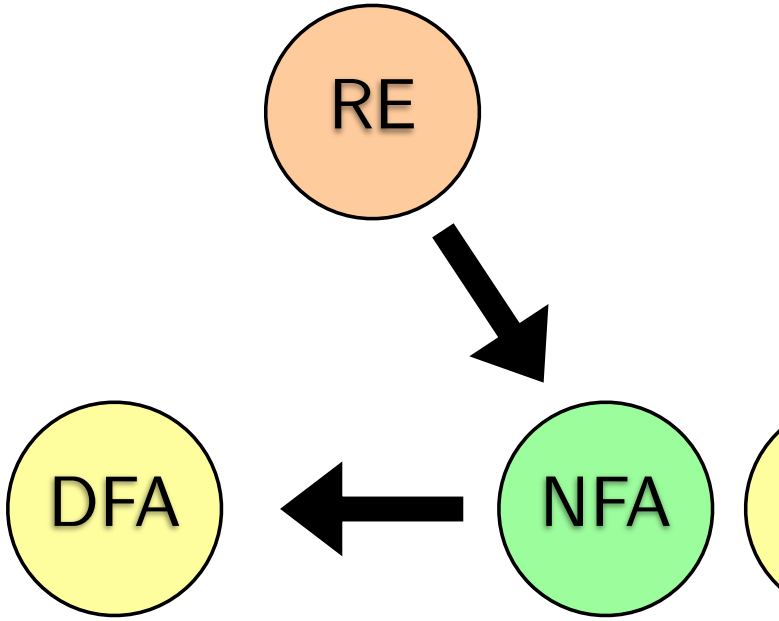

Convert DFA into RE

- Given: DFA $A = \langle Q, \Sigma, \delta, q_0, F \rangle$
- Goal: RE $r(A)$ with $L(r(A)) = L(A)$
- Idea: For each state q, generate an equation describing the language $L(q)$ that is accepted from that state, depending on the languages accepted at neighboring states
  - For each transition with c to q': $c \cdot L(q')$
  - Accepting states: ε
- Solve the resulting system for $L(q_0)$
  - Result: RE describing $L(q_0) = L(A)$
- Convention:
  - States are named $\{0, 1, \ldots, n\}$
  - Start state is 0
  - We write L_k instead of $L(k)$ to describe the language accepted at state k

Convert DFA to RE: Example

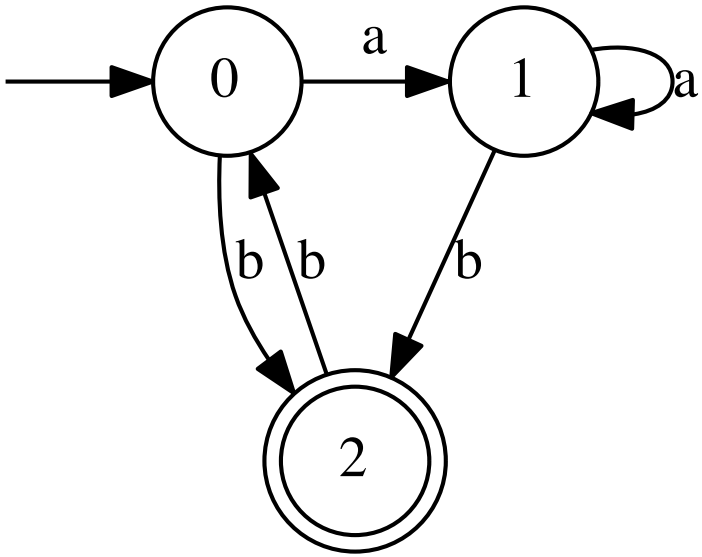

- $L_0 = aL_1 + bL_2$
- $L_1 = aL_1 + bL_2$
- $L_2 = bL_0 + \varepsilon$

3 equations, 3 unknowns

What now?

Insert: Arden's Lemma

Lemma:

$$\varepsilon \notin L(s) \text{ and } r \doteq sr + t \longrightarrow r \doteq s^* t \quad (90)$$

Compare Arto Salomaa:

$$\varepsilon \notin L(s) \text{ and } r \doteq rs + t \longrightarrow r \doteq ts^*$$

Arden, Dean N.: *Delayed-logic and finite-state machines*, Proceedings of the Second Annual Symposium on Switching Circuit Theory and Logical Design, 1961, pp. 133–151, IEEE

Convert DFA to RE: Example

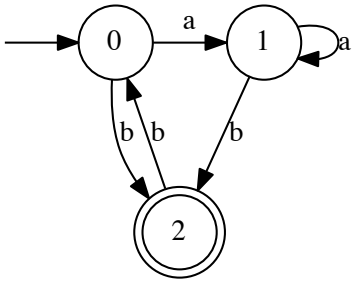

- $L_0 = aL_1 + bL_2$
- $L_1 = aL_1 + bL_2$
- $L_2 = bL_0 + \varepsilon$

$$
\begin{aligned}
L_1 &\doteq aL_1 + b(bL_0 + \varepsilon) \\
&\doteq a^*b(bL_0 + \varepsilon) \text{ [Arden]} \\
L_0 &\doteq a(a^*b(bL_0 + \varepsilon)) + b(bL_0 + \varepsilon) \\
&\doteq aa^*bbL_0 + aa^*b + bbL_0 + b \text{ [Dist.]} \\
&\doteq (aa^*bb + bb)L_0 + aa^*b + b \text{ [Comm.,Dist.]} \\
&\doteq (aa^*bb + bb)^*(aa^*b + b) \text{ [Arden]} \\
&\doteq ((aa^* + \varepsilon)bb)^*((aa^* + \varepsilon)b) \text{ [Dist.]} \\
&\doteq (a^*bb)^*(a^*b) \text{ [} rr^* + \varepsilon \doteq r^* \text{]} \qquad (91)
\end{aligned}
$$

Convert DFA to RE: Example (continued)

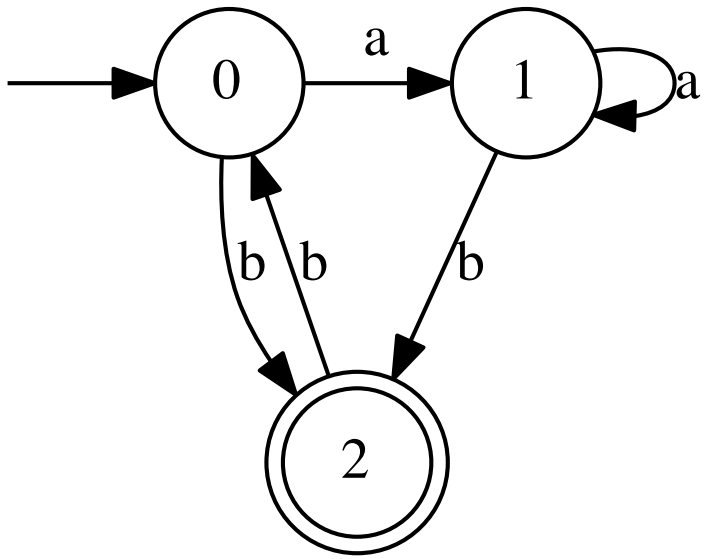

$$\begin{aligned} L_0 &\doteq \ldots \\ &\doteq (a^*bb)^*(a^*b) \end{aligned}$$

- Ergo: $L(A) = L((a^*bb)^*(a^*b))$

Resume: Finite automata and regular expressions

- We have learned how to convert
  - regular expressions to equivalent NFAs
  - NFAs to equivalent DFAs
  - (DFAs to equivalent NFAs)
  - DFAs to equivalent REs

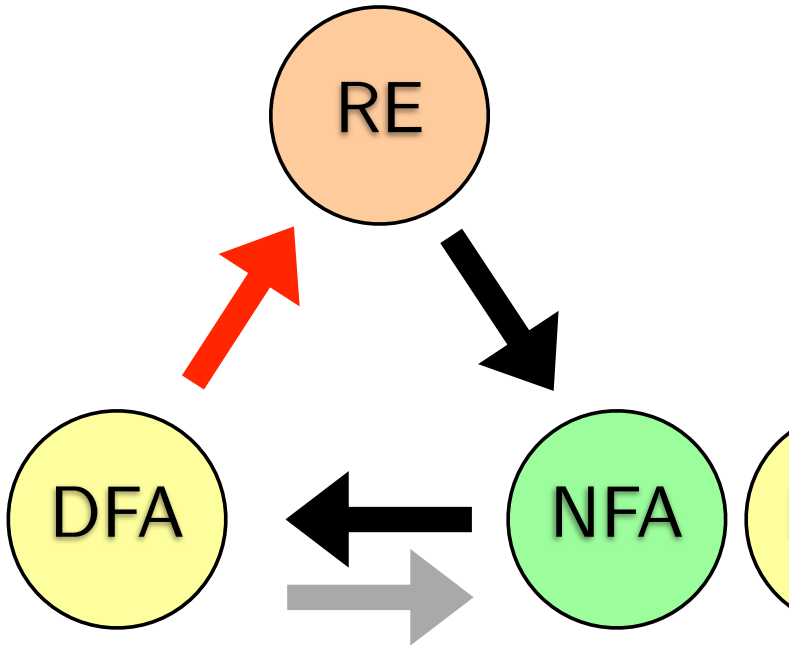

REs, NFAs and DFAs describe the same class of languages – *regular languages*!

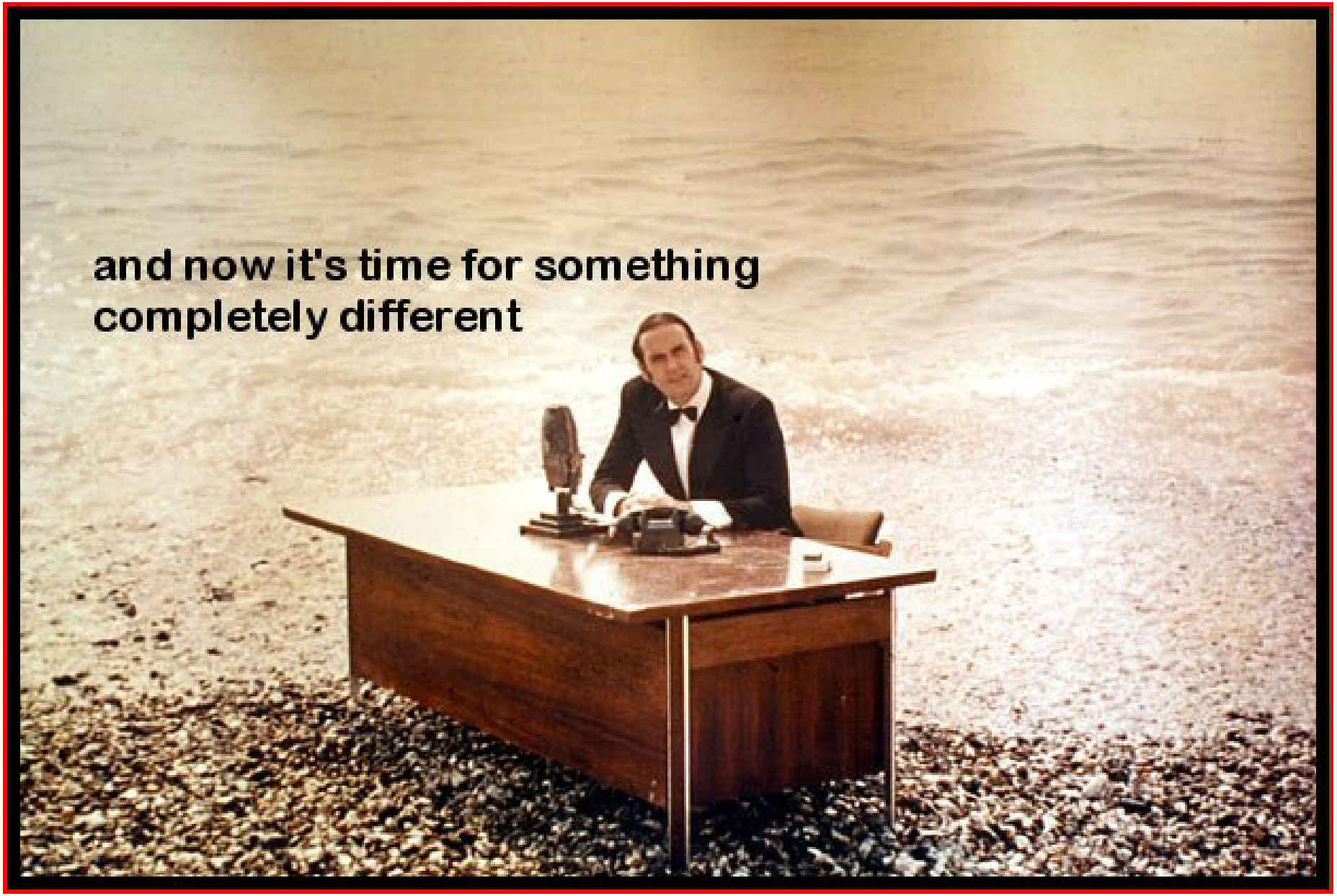
and now it's time for something
completely different

Minimization of DFAs

Given the DFA

$$A = \langle Q, \Sigma, \delta, q_0, F \rangle, \tag{92}$$

we want to derive a DFA

$$A^- = \langle Q^-, \Sigma, \delta^-, q_0, F^- \rangle, \tag{93}$$

accepting the same language, i.e.,

$$L(A) = L(A^-) \tag{94}$$

for which the number of states (elements of Q^-) is minimal.

Minimization of DFAs: example/exercise

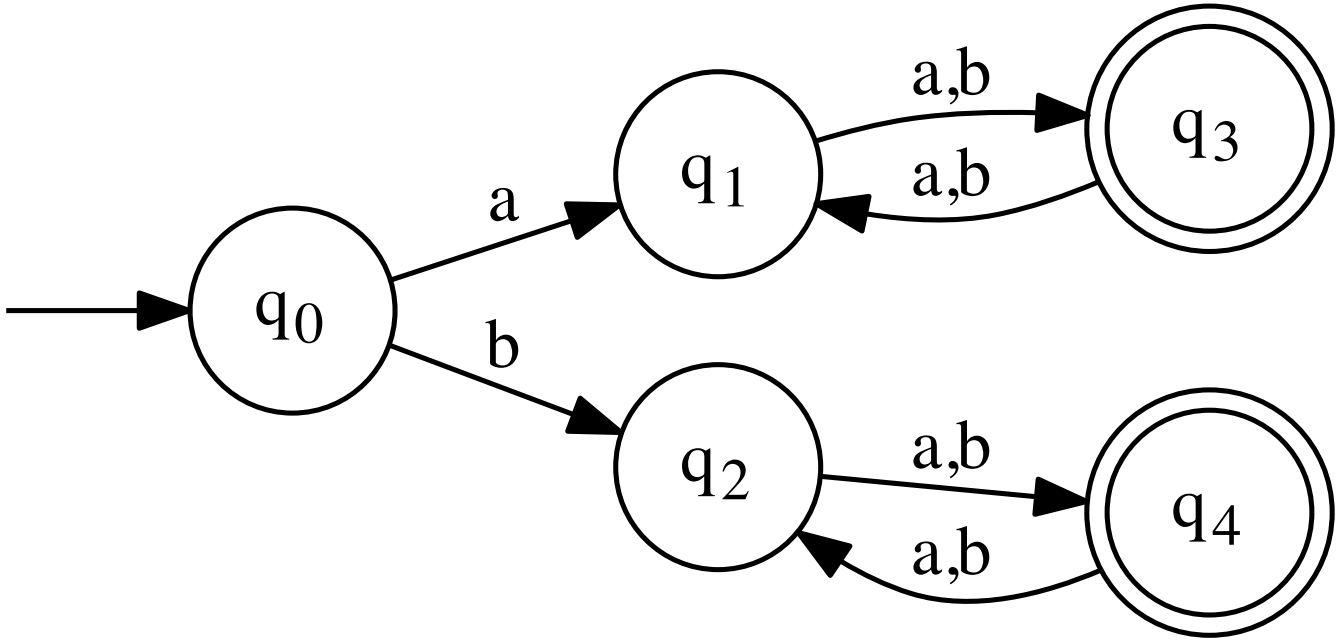

- How small can we make it?

Minimization of DFAs

Assume the DFA $A = \langle Q, \Sigma, \delta, q_0, F \rangle$

- The idea is to identify the set V comprising all the pairs of necessarily distinct states
  - Base case: Two states p, q are necessarily distinct if one of them is accepting, the other is not accepting
  - Inductive case: Two states p, q are necessarily distinct if there is a $c \in \Sigma$ such that $\delta(p, c) = p', \delta(q, c) = q'$ and p', q' are already necessarily distinct
- Formally: V is the smallest set of tuples with
  - $\{\langle p, q \rangle | p \in F, q \notin F\} \subset V$
  - $\{\langle p, q \rangle | p \notin F, q \in F\} \subset V$
  - $\delta(p, c) = p', \delta(q, c) = q', \langle p', q' \rangle \in V$ for some $c \in \Sigma \rightarrow \langle p, q \rangle \in V$

Minimization of DFAs: the algorithm

1. We initialize V with all those pairs for which one member is a final state and the other is not:

$$V = \{\langle p, q\rangle \in Q \times Q | (p \in F \wedge q \notin F) \vee (p \notin F \wedge q \in F)\}. \quad (95)$$

2. While we can find a pair of states $\langle p, q\rangle$ and a symbol c such that the states $\delta(p, c)$ and $\delta(q, c)$ are necessarily distinct, we keep adding this pair and its inverse to V:

$$\begin{aligned} &\texttt{while}\,(\exists\langle p, q\rangle \in Q \times Q \quad \exists c \in \Sigma \mid \\ &\quad \langle \delta(p, c), \delta(q, c)\rangle \in V \wedge \langle p, q\rangle \notin V\,) \\ &\{ \\ &\quad V = V \cup \{\langle p, q\rangle, \langle q, p\rangle\} \\ &\} \end{aligned} \quad (96)$$

Minimization of DFAs: Merging States

- If we have a pair of states $\langle p, q \rangle$ and reading all possible symbols $c \in \Sigma$ results the same successor states, then p and q are indistinguishable:

$$\forall c \in \Sigma : \delta(p, c) = \delta(q, c) \rightarrow \langle p, q \rangle, \langle q, p \rangle \notin V. \tag{97}$$

- Indistinguishable states p, q can be merged
  - Replace all transitions to p by transitions to q
  - Remove p
- This process can be iterated to identify and merge all indistinguishable pairs of states

Minimization of DFAs: example

We want to minimize this DFA with 5 states:

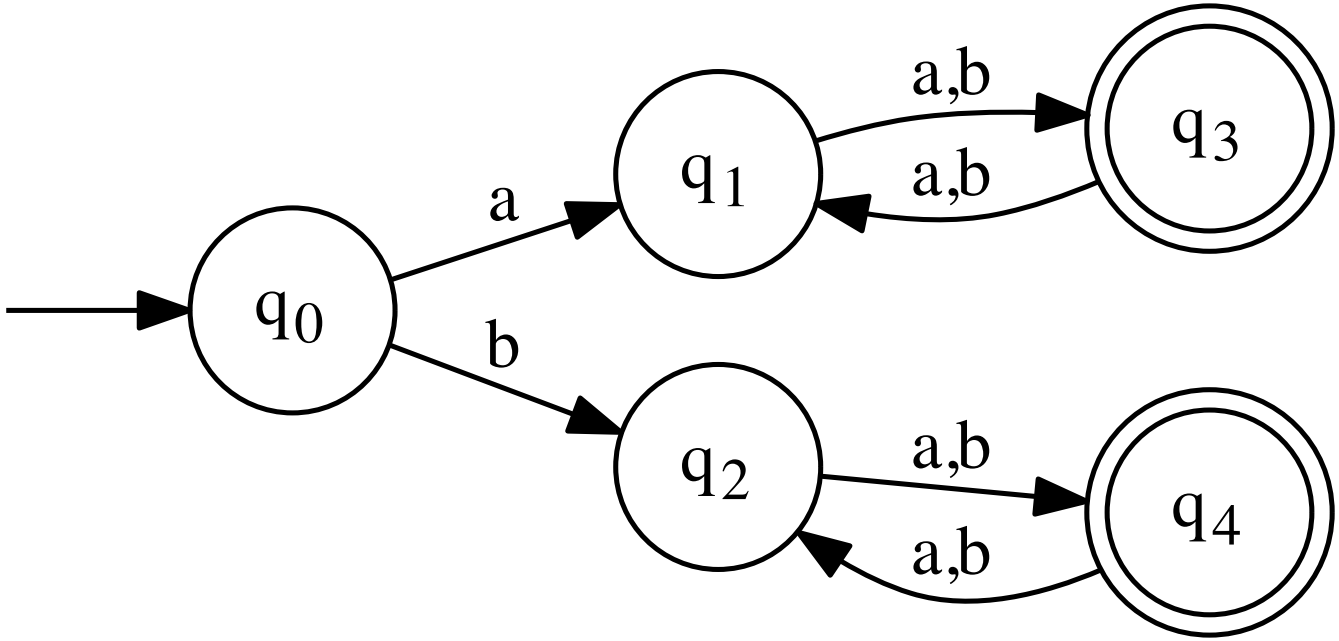

Minimization of DFAs: example (cont.)

This is the formal definition of the DFA:

$$A = \langle Q, \Sigma, \delta, q_0, F \rangle \tag{98}$$

with

1. $Q = \{q_0, q_1, q_2, q_3, q_4\}$
2. $\Sigma = \{\mathtt{a}, \mathtt{b}\}$
3. $\delta = \ldots$ (skipped to save space, see graph)
4. $q_0 = q_0$
5. $F = \{q_3, q_4\}$

- For the sake of practicality, we represent the set V by means of a two-dimensional table with the elements of Q as columns and rows and V's elements as cells featuring the symbol $\times$.
- Analogously, we represent state pairs that are definitely not members of V using the symbol $\circ$.

Minimization of DFAs: example (cont.)

1. By determining all combinations of states in $F = \{q_3, q_4\}$ and $Q \backslash F = \{q_0, q_1, q_2\}$, we get the following initial state of V:

	q_0	q_1	q_2	q_3	q_4
q_0				$\times$	$\times$
q_1				$\times$	$\times$
q_2				$\times$	$\times$
q_3	$\times$	$\times$	$\times$		
q_4	$\times$	$\times$	$\times$		

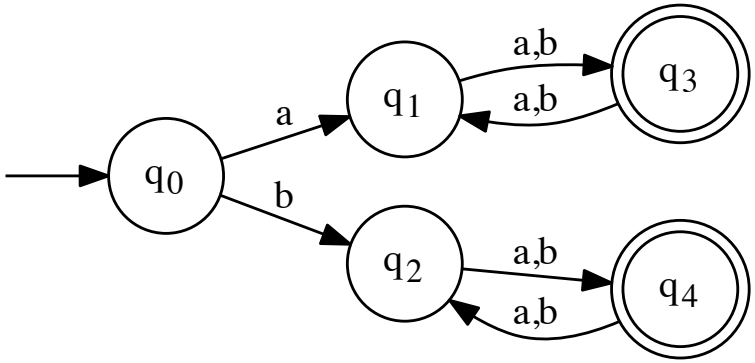

Minimization of DFAs: example (cont.)

2. Furthermore, the cases $\langle q_i, q_i \rangle | i \in \{0, \cdots, 4\}$ are naturally indistinguishable since they are identical:

	q_0	q_1	q_2	q_3	q_4
q_0	○			×	×
q_1		○		×	×
q_2			○	×	×
q_3	×	×	×	○	
q_4	×	×	×		○

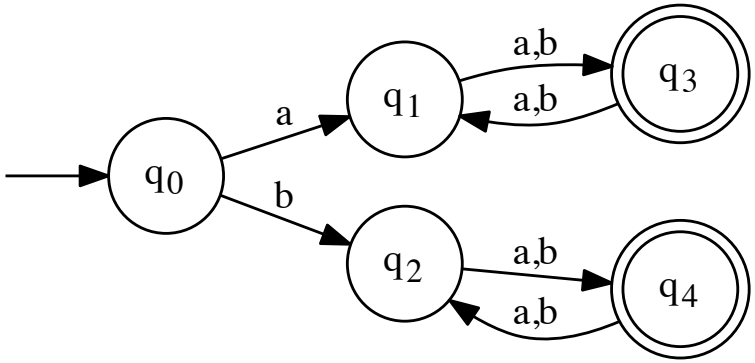

Minimization of DFAs: example (cont.)

3. Now, we iterate over all the remaining state-pairs and symbols. In doing so, we can skip the cases $\langle q_i, q_j \rangle | i, j \in \{0, \cdots, 4\}; j < i$ due to the symmetry of the distinguishability of states.

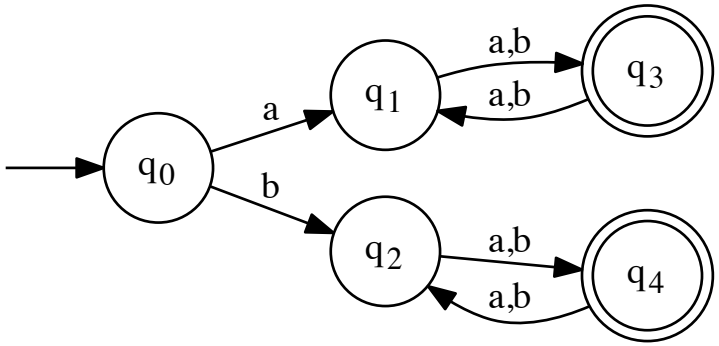

- $\delta(q_0, \mathtt{a}) = q_1; \delta(q_1, \mathtt{a}) = q_3; \langle q_1, q_3 \rangle \in V \rightarrow \langle q_0, q_1 \rangle, \langle q_1, q_0 \rangle \in V$
  $\delta(q_0, \mathtt{a}) = q_1; \delta(q_2, \mathtt{a}) = q_4; \langle q_1, q_4 \rangle \in V \rightarrow \langle q_0, q_2 \rangle, \langle q_2, q_0 \rangle \in V$
- $\delta(q_1, \mathtt{a}) = q_3; \delta(q_2, \mathtt{a}) = q_4; \langle q_3, q_4 \rangle \notin V$ (as of yet)
  $\delta(q_1, \mathtt{b}) = q_3; \delta(q_2, \mathtt{b}) = q_4; \langle q_3, q_4 \rangle \notin V$ (as of yet)
- $\delta(q_3, \mathtt{a}) = q_1; \delta(q_4, \mathtt{a}) = q_2; \langle q_1, q_2 \rangle \notin V$ (as of yet)
  $\delta(q_3, \mathtt{b}) = q_1; \delta(q_4, \mathtt{b}) = q_2; \langle q_1, q_2 \rangle \notin V$ (as of yet)

Minimization of DFAs: example (cont.)

Since no other distinguishable state pairs could be found, we fill empty cells with $\circ$:

	q_0	q_1	q_2	q_3	q_4
q_0	$\circ$	$\times$	$\times$	$\times$	$\times$
q_1	$\times$	$\circ$	$\circ$	$\times$	$\times$
q_2	$\times$	$\circ$	$\circ$	$\times$	$\times$
q_3	$\times$	$\times$	$\times$	$\circ$	$\circ$
q_4	$\times$	$\times$	$\times$	$\circ$	$\circ$

From the table, we can derive the following (non-diagonal, non-symmetrical) indistinguishable state pairs:

a) $\langle q_1, q_2 \rangle$,

b) $\langle q_3, q_4 \rangle$.

Minimization of DFAs: example (cont.)

- This is the minimized DFA after merging indistinguishable states:

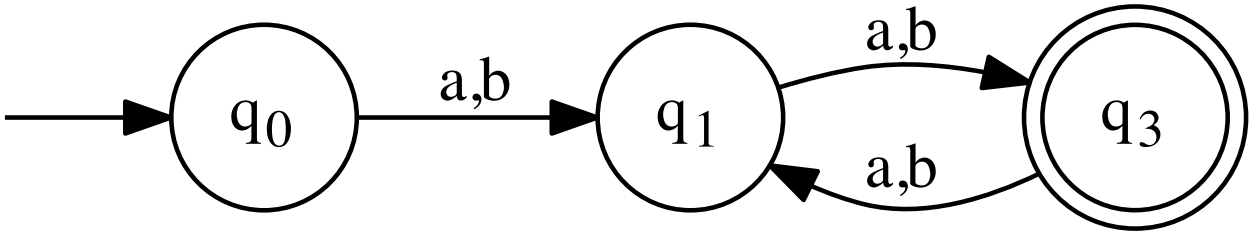

Handling Ω

- The algorithm does not handle missing transitions/Ω-transitions
  - A rejection due to a a missing transition is indistinguiable from a rejection due to reachung a junk state
- Solution: If the automaton has a missing transition, add an explicit junk state and complete the transition function

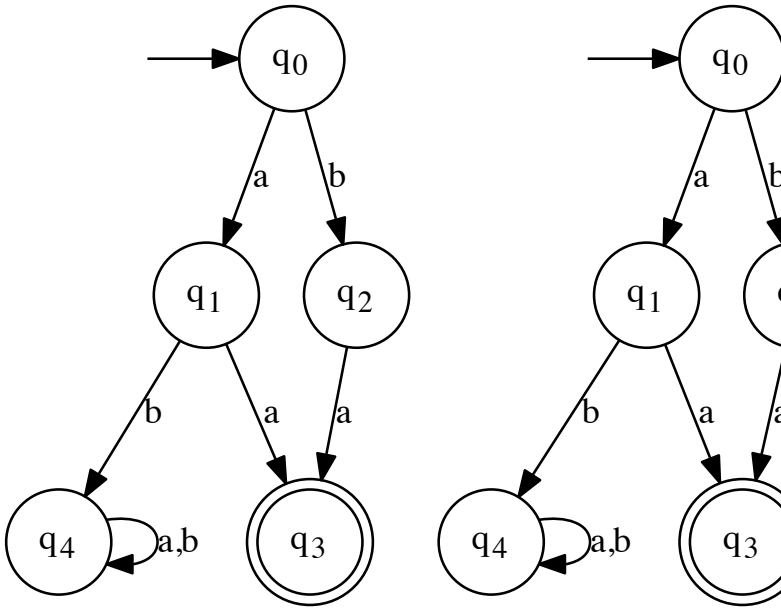

Minimization of DFAs: exercise

Derive a minimal DFA accepting the language

$$L(\mathtt{a}(\mathtt{ba})^*). \tag{99}$$

Solve the exercise in three steps:

1. Derive an NFA accepting L.
2. Transform the NFA into a DFA.
3. Minimize the DFA.

Homework assignment

- Consider $\Sigma = \{a, b\}$ and $L = \{aba, bab\} \cup \{wbb | w \in \Sigma^*\}$
  - Find an RE for this language
  - Convert the RE into an NFA
  - Convert the NFA to a DFA
  - Minimize the DFA
  - Convert the minimal DFA back into an RE
- Give a graphical representation of the 3 automata (NFA, DFA, minimized DFA)

Review of Goals

- Completing the circle
  - REs can be simulated by NFAs
  - DFAs can be simulated by REs
- Minimization of DFAs

Feedback round

- What was the best part of todays lecture?
- What part of todays lecture has the most potential for improvement?
  - Optional: how would you improve it?

Goals for Today

- Refresher & Homework
- Equivalence of regular expressions
- Properties of regular languages
  - Closure properties
  - Decision problems
- Non-regular languages and the pumping lemma

Refresher

- Simulation of REs via NFAs: Composition of NFAs
- Simulation of DFAs via REs: Solve system of equations
  - May need Arden's Lemma to handle loops!
- Important: NFAs, DFAs, REs are all equivalent!
- Minimization of DFAs:
  - Compute necessarily distinct states
  - Merge indistinguishable states

Homework assignment

- Consider $\Sigma = \{a, b\}$ and $L = \{aba, bab\} \cup \{wbb | w \in \Sigma^*\}$
  - Find an RE for this language
  - Convert the RE into an NFA
  - Convert the NFA to a DFA
  - Minimize the DFA
  - Convert the minimal DFA back into an RE
- Give a graphical representation of the 3 automata (NFA, DFA, minimized DFA)

I've underestimated the effort!

Homework: RE

- Consider $\Sigma = \{a, b\}$ and $L = \{aba, bab\} \cup \{wbb | w \in \Sigma^*\}$
- An RE R with $L(R) = L$ is:
  $R = (aba + bab) + (a + b)^* bb$

Homework: NFA

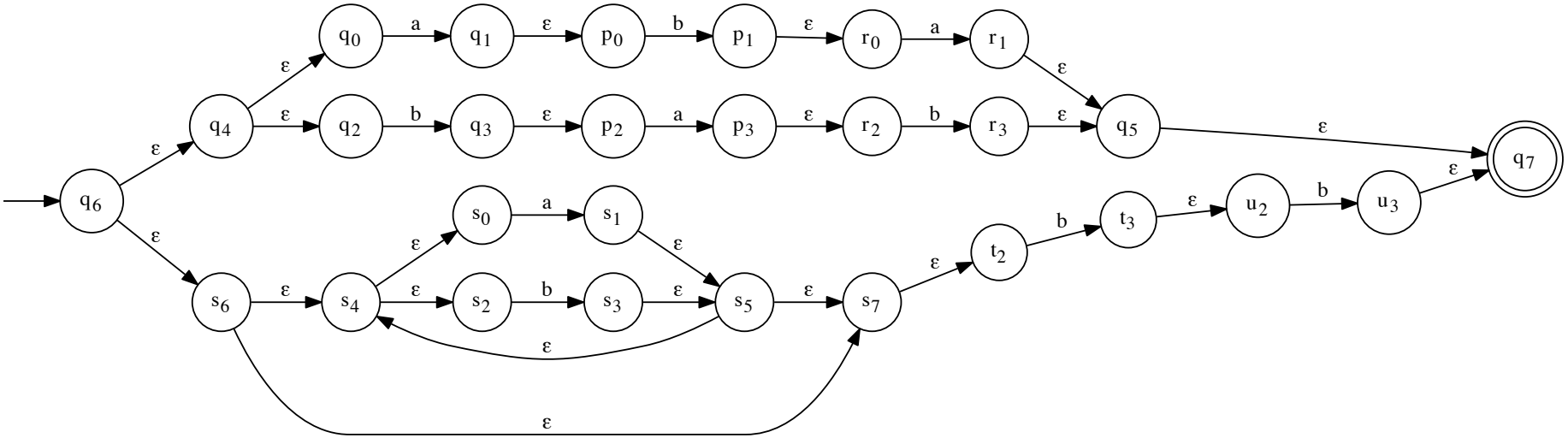

- Straightforward construction
- 28 states (ouch!)

Homework: DFA

HOW LONG CAN YOU WORK ON MAKING A ROUTINE TASK MORE EFFICIENT BEFORE YOU'RE SPENDING MORE TIME THAN YOU SAVE?
(ACROSS FIVE YEARS)

HOW MUCH TIME YOU SHAVE OFF	HOW OFTEN YOU DO THE TASK: 50/DAY	5/DAY	DAILY	WEEKLY	MONTHLY	YEARLY
1 SECOND	1 DAY	2 HOURS	30 MINUTES	4 MINUTES	1 MINUTE	5 SECONDS
5 SECONDS	5 DAYS	12 HOURS	2 HOURS	21 MINUTES	5 MINUTES	25 SECONDS
30 SECONDS	4 WEEKS	3 DAYS	12 HOURS	2 HOURS	30 MINUTES	2 MINUTES
1 MINUTE	8 WEEKS	6 DAYS	1 DAY	4 HOURS	1 HOUR	5 MINUTES
5 MINUTES	9 MONTHS	4 WEEKS	6 DAYS	21 HOURS	5 HOURS	25 MINUTES
30 MINUTES		6 MONTHS	5 WEEKS	5 DAYS	1 DAY	2 HOURS
1 HOUR		10 MONTHS	2 MONTHS	10 DAYS	2 DAYS	5 HOURS
6 HOURS				2 MONTHS	2 WEEKS	1 DAY
1 DAY					8 WEEKS	5 DAYS

Image credit: Randal Munroe, `http://xkcd.com/1205/`

Homework: DFA (1)

```
S0 = frozenset(['q0', 'q2', 'q4', 'q6', 's2', 's0', 's7', 's6', 's4', 't2'])
Delta(S0, a) =  frozenset(['q1', 'p0', 's2', 's1', 's0', 't2', 's5', 's4', 's7'])
S1  =  frozenset(['q1', 'p0', 's2', 's1', 's0', 't2', 's5', 's4', 's7'])
Delta(S0, b) =  frozenset(['p2', 'q3', 's3', 's2', 's7', 's0', 't2', 't3', 's5', 'u2', 's4'])
S2  =  frozenset(['p2', 'q3', 's3', 's2', 's7', 's0', 't2', 't3', 's5', 'u2', 's4'])
Delta(S1, a) =  frozenset(['s2', 's1', 's0', 't2', 's7', 's5', 's4'])
S3  =  frozenset(['s2', 's1', 's0', 't2', 's7', 's5', 's4'])
Delta(S1, b) =  frozenset(['p1', 'r0', 's3', 's2', 's7', 's0', 't2', 't3', 's5', 'u2', 's4'])
S4  =  frozenset(['p1', 'r0', 's3', 's2', 's7', 's0', 't2', 't3', 's5', 'u2', 's4'])
Delta(S2, a) =  frozenset(['p3', 'r2', 's2', 's1', 's0', 't2', 's5', 's4', 's7'])
S5  =  frozenset(['p3', 'r2', 's2', 's1', 's0', 't2', 's5', 's4', 's7'])
Delta(S2, b) =  frozenset(['q7', 's3', 's2', 's0', 's7', 't3', 's5', 'u2', 't2', 'u3', 's4'])
S6  =  frozenset(['q7', 's3', 's2', 's0', 's7', 't3', 's5', 'u2', 't2', 'u3', 's4'])
Delta(S3, a) =  frozenset(['s2', 's1', 's0', 't2', 's7', 's5', 's4'])
State is equal to  S3
Delta(S3, b) =  frozenset(['s3', 's2', 's0', 's7', 't3', 's5', 'u2', 't2', 's4'])
S7  =  frozenset(['s3', 's2', 's0', 's7', 't3', 's5', 'u2', 't2', 's4'])
Delta(S4, a) =  frozenset(['q5', 'r1', 'q7', 's2', 's1', 's0', 't2', 's5', 's4', 's7'])
S8  =  frozenset(['q5', 'r1', 'q7', 's2', 's1', 's0', 't2', 's5', 's4', 's7'])
Delta(S4, b) =  frozenset(['q7', 's3', 's2', 's0', 's7', 't3', 's5', 'u2', 't2', 'u3', 's4'])
State is equal to  S6
Delta(S5, a) =  frozenset(['s2', 's1', 's0', 't2', 's7', 's5', 's4'])
State is equal to  S3
Delta(S5, b) =  frozenset(['q5', 'q7', 'r3', 's3', 's2', 's7', 's0',
                           't2', 't3', 's5', 'u2', 's4'])
...
```

Homework: DFA (2)

```
...
S9  =  frozenset(['q5', 'q7', 'r3', 's3', 's2', 's7', 's0', 't2', 't3', 's5', 'u2', 's4'])
Delta(S6, a) =  frozenset(['s2', 's1', 's0', 't2', 's7', 's5', 's4'])
State is equal to  S3
Delta(S6, b) =  frozenset(['q7', 's3', 's2', 's0', 's7', 't3', 'u3', 's4', 't2', 's5', 'u2'])
State is equal to  S6
Delta(S7, a) =  frozenset(['s2', 's1', 's0', 't2', 's7', 's5', 's4'])
State is equal to  S3
Delta(S7, b) =  frozenset(['q7', 's3', 's2', 's0', 's7', 't3', 'u3', 's4', 't2', 's5', 'u2'])
State is equal to  S6
Delta(S8, a) =  frozenset(['s2', 's1', 's0', 't2', 's7', 's5', 's4'])
State is equal to  S3
Delta(S8, b) =  frozenset(['s3', 's2', 's0', 's7', 't3', 's5', 'u2', 't2', 's4'])
State is equal to  S7
Delta(S9, a) =  frozenset(['s2', 's1', 's0', 't2', 's7', 's5', 's4'])
State is equal to  S3
Delta(S9, b) =  frozenset(['q7', 's3', 's2', 's0', 's7', 't3', 's5', 'u2', 't2', 'u3', 's4'])
State is equal to  S6
```

Homework: DFA (3)

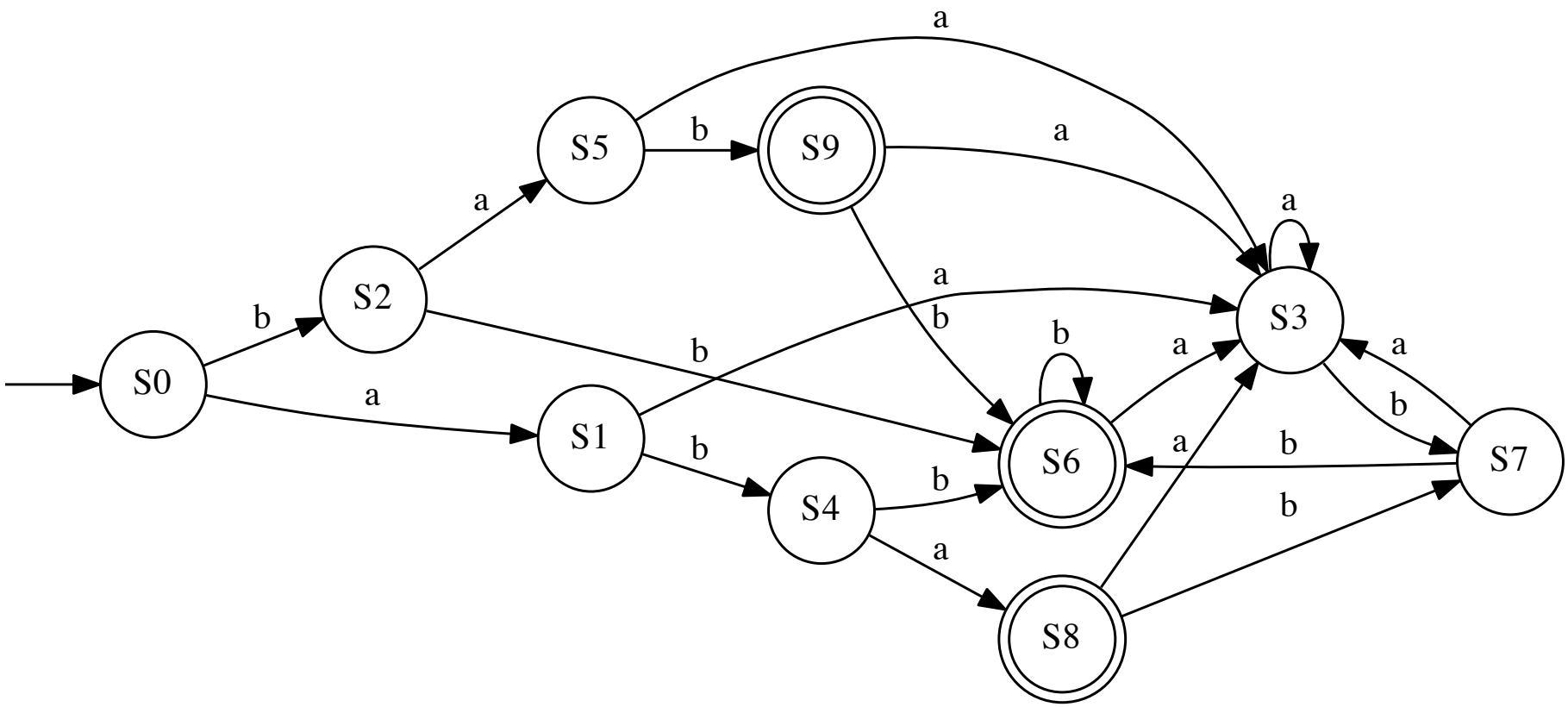

Homework: DFA minimisation

	S0	S1	S2	S3	S4	S5	S6	S7	S8	S9
S0	o									
S1		o								
S2			o							
S3				o						
S4					o					
S5						o				
S6							o			
S7								o		
S8									o	
S9										o

Homework: DFA minimisation

	S0	S1	S2	S3	S4	S5	S6	S7	S8	S9
S0	o									
S1		o								
S2	x		o							
S3				o						
S4	x				o					
S5	x					o				
S6	x						o			
S7	x							o		
S8									o	
S9	x						o			o

Homework: DFA minimisation

	S0	S1	S2	S3	S4	S5	S6	S7	S8	S9
S0	o	x	x	x	x	x	x	x	x	x
S1	x	o	x	x	x	x	x	x	x	x
S2	x	x	o	x	x	x	x	x	x	x
S3	x	x	x	o	x	x	x	x	x	x
S4	x	x	x	x	o	x	x	x	x	x
S5	x	x	x	x	x	o	x	o	x	x
S6	x	x	x	x	x	x	o	x	x	o
S7	x	x	x	x	x	o	x	o	x	x
S8	x	x	x	x	x	x	x	x	o	x
S9	x	x	x	x	x	x	o	x	x	o

- S6 und S9 sind ununterscheidbar
- S5 und S7 sind ununterscheidbar

Homework: DFA (minimised)

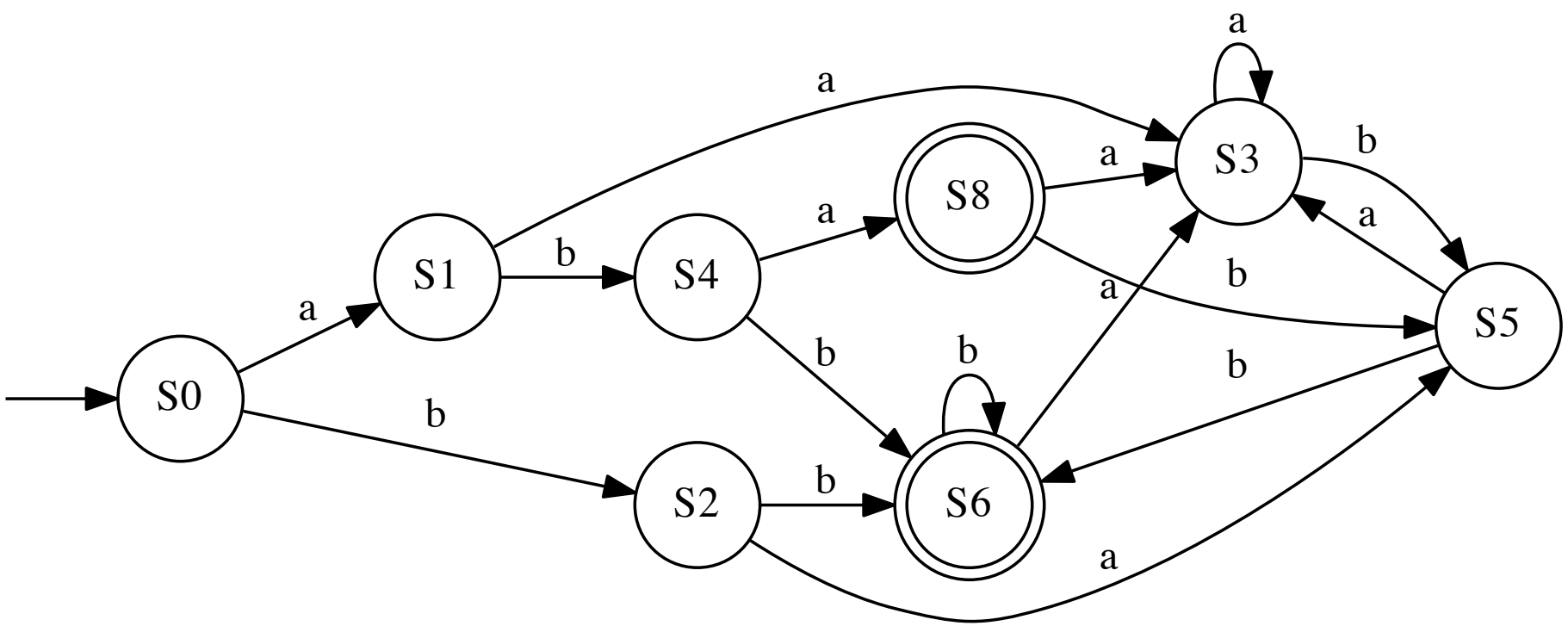

Homework: System of equations

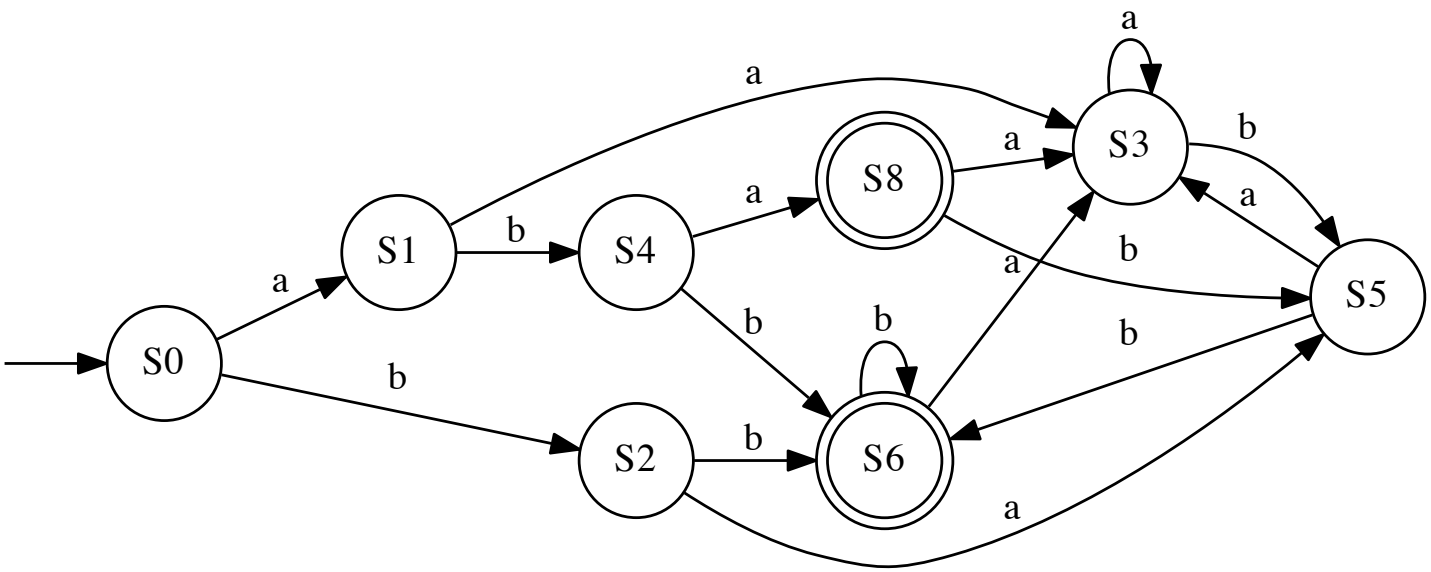

- $L_0 \doteq aL_1 + bL_2$
- $L_1 \doteq aL3 + bL_4$
- $L_2 \doteq aL_5 + bL_6$
- $L_3 \doteq aL_3 + bL_5 \doteq a^* bL_5$
- $L_4 \doteq aL_8 + bL_6$
- $L_5 \doteq aL_3 + bL_6$
- $L_6 \doteq aL_3 + bL_6 + \varepsilon \doteq b^*(aL_3 + \varepsilon)$
- $L_8 \doteq aL_3 + bL_5 + \varepsilon$

If someone has solved this, I'd like the solution...

Equivalence of regular expressions

Equivalence of regular expressions

- Earlier in this lecture, we have seen that there can be multiple regular expressions describing the same language.
- We have also learned that using algebraic transformation rules to prove equivalence of regular expressions can be very difficult or even impossible.
- In the following, we will learn a straight-forward algorithm proving equivalence of regular expressions based on FSMs.
- The algorithm involves four steps and is described in the textbook by John E. Hopcroft, Rajeev Motwani, Jeffrey D. Ullman: *Introduction to Automata Theory, Languages, and Computation (3rd edition)*, 2007 (and earlier editions)

Equivalence of regular expressions: algorithm

1. Given the regular expressions r_1 and r_2, derive NFAs A_1 and A_2 accepting their respective languages:

$$L(r_1) = L(A_1) \quad \text{and} \quad L(r_2) = L(A_2). \tag{100}$$

2. Transform the NFAs A_1 and A_2 into the DFAs D_1 and D_2.
3. Minimize the DFAs D_1 and D_2 yielding the DFAs M_1 and M_2.
4. If $r_1 \doteq r_2$, then M_1 and M_2 must be identical modulo renaming of states

Note: If you can show equivalence in any intermediate stage of the algorithm, this is enough to prove $r_1 \doteq r_2$ (e.g. if $A_1 = A_2$).

Equivalence of regular expressions: exercise

Reusing an exercise from an earlier section, prove the following equivalence (by conversion to minimal DFAs):

$$\mathtt{10}(\mathtt{10})^* \doteq \mathtt{1}(\mathtt{01})^*\mathtt{0}$$

Homework

Properties of regular languages

Regular languages: Closure properties

- Reminders:
  - Formal languages are sets of words (over a finite alphabet)
  - A formal language L is a *regular language* if any of the following holds:
    - There exists an NFA A with $L(A) = L$
    - There exists a DFA A with $L(A) = L$
    - There exists a regular expression R with $L(R) = L$
    - There exists a regular *grammar* G with $L(G) = L$
- Fact: Not all languages are regular
  - Proof later today

Question
What can we do to regular languages and be sure the result is still regular?

Closure properties (Question)

Question: If L_1 and L_2 are regular languages, does the same hold for

- $L_1 \cup L_2$?
- $L_1 \cap L_2$?
- $L_1 \cdot L_2$?
- $\overline{L_1}$, i.e. $\Sigma^* \setminus L$?
- L_1^*?

Are regular languages closed under union, intersection, concatenation, complement, and Kleene-star?

Closure properties (Theorem)

Theorem: Let L_1 and L_2 be regular languages. Then the following langages are all regular:

- $L_1 \cup L_2$
- $L_1 \cap L_2$
- $L_1 \cdot L_2$
- $\overline{L_1}$, i.e. $\Sigma^* \setminus L$
- L_1^*?

Proof?

- Idea: We postulate (disjoint) finite automata for L_1 and L_2 and construct an automaton for the different languages above.

Closure under union, concatenation, and Kleene-star

We use the same construction that was used to generate NFAs for regular expressions:
Let A_{L_1} and A_{L_2} be automata for L_1 and L_2.

$L_1 \cup L_2$: new initial state, ε-transitions to the initial states of A_{L_1} and A_{L_2}

$L_1 \cdot L_2$: ε-transition from the final state(s) of A_{L_1} to the initial state of A_{L_2}

$(L_1)^*$:

- new initial and final states,
- ε-transitions from the original final states to the original initial state,
- ε-transition from the new initial to the new final state.

Visual refresher

$L_1 \cup L_2$

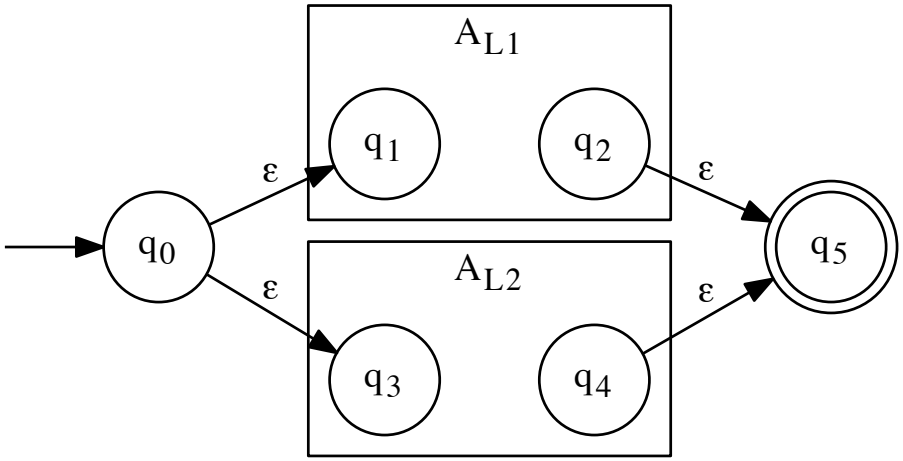

$L_1 \circ L_2$

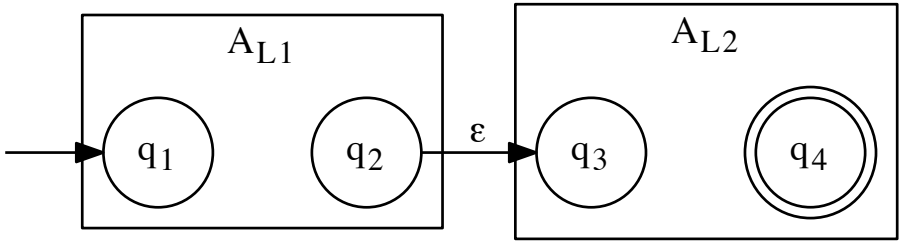

L_1^*

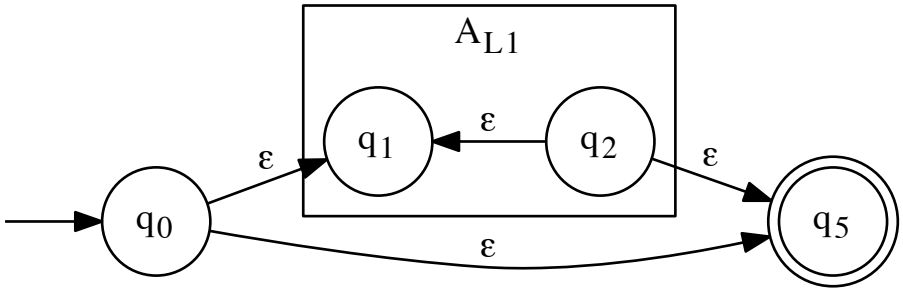

Closure under intersection

Let $A_{L_1} = (Q_1, \Sigma, \delta_1, q_{0_1}, F_1)$ and $A_{L_2} = (Q_2, \Sigma, \delta_2, q_{0_2}, F_2)$ be DFAs for L_1 and L_2.

An automaton $L = (Q, \Sigma, \delta, q_0, F)$ for $A_{L_1} \cap A_{L_2}$ can be generated as follows:

- $Q = Q_1 \times Q_2$
- $\delta((q_1, q_2), a) = (\delta_1(q_1, a), \delta_2(q_2, a))$ for all $q_1 \in Q_1, q_2 \in Q_2, a \in \Sigma$
- $q_0 = (q_{0_1}, q_{0_2})$
- $F = F_1 \times F_2$

This so-called product automaton

- starts in a state that corresponds to the initial states of A_{L_1} and A_{L_2},
- simulates simultaneous processing in both automata
- accepts if both A_{L_1} and A_{L_2} accept.

Product automaton: exercise

Generate automata for

- $L_1 = \{w \in \{0,1\}^* \mid |w|_1 \text{ is divisible by } 2\}$
- $L_2 = \{w \in \{0,1\}^* \mid |w|_1 \text{ is divisible by } 3\}$

Then generate an automaton for $L_1 \cap L_2$.

Closure under complement

Let A_L be an DFA for the language L.
(including a junk state, i.e. there is a transition from every state for every alphabet symbol, no Ω transitions)

Then $\overline{A_L} = \langle Q, \Sigma, q_0, \delta, Q \setminus F \rangle$ is an automaton accepting $\overline{L}$:

- if $w \in L(A)$ then $\delta'(q_0, w) \in F$, i.e. $\delta'(q_0, w) \notin Q \setminus F$, which implies $w \notin L(\overline{A_L})$.
- if $w \notin L(A)$ then $\delta'(q_0, w) \notin F$, i.e. $\delta'(q_0, w) \in Q \setminus F$, which implies $w \in L(\overline{A_L})$.

All we have to do is exchange final and non-final states.

Reminder:

$\delta' : Q \times \Sigma^* \to Q$

$\delta'(q_0, w)$ is the final state of the automaton after processing w

Closure properties: exercise CPNR

Show that $L = \{w \in \{0,1\}^* \mid |w|_0 = |w|_1\}$ is not regular.

Hint: Use the following:

- $0^n 1^n$ is not regular.
- $0^* 1^*$ is regular.
- (one of) the closure properties shown before.

Finite languages

Regularity of finite languages

Every finite language, i.e. every language containing only a finite number of words, is regular.

Proof: Let $L = \{w_1, \ldots, w_n\}$.

- For each w_i, generate an automaton A_i with initial state q_{0_i} and final state q_{f_i}.
- Let q_0 be a new state, from which there is an ε-transition to each q_{0_i}.

Then the resulting automaton, with q_0 as initial state and all q_{f_i} as final states accepts L.

Finite languages: Example

- Assume $L = \{if, then, else, while, goto, for\}$ over Σ_{ascii}

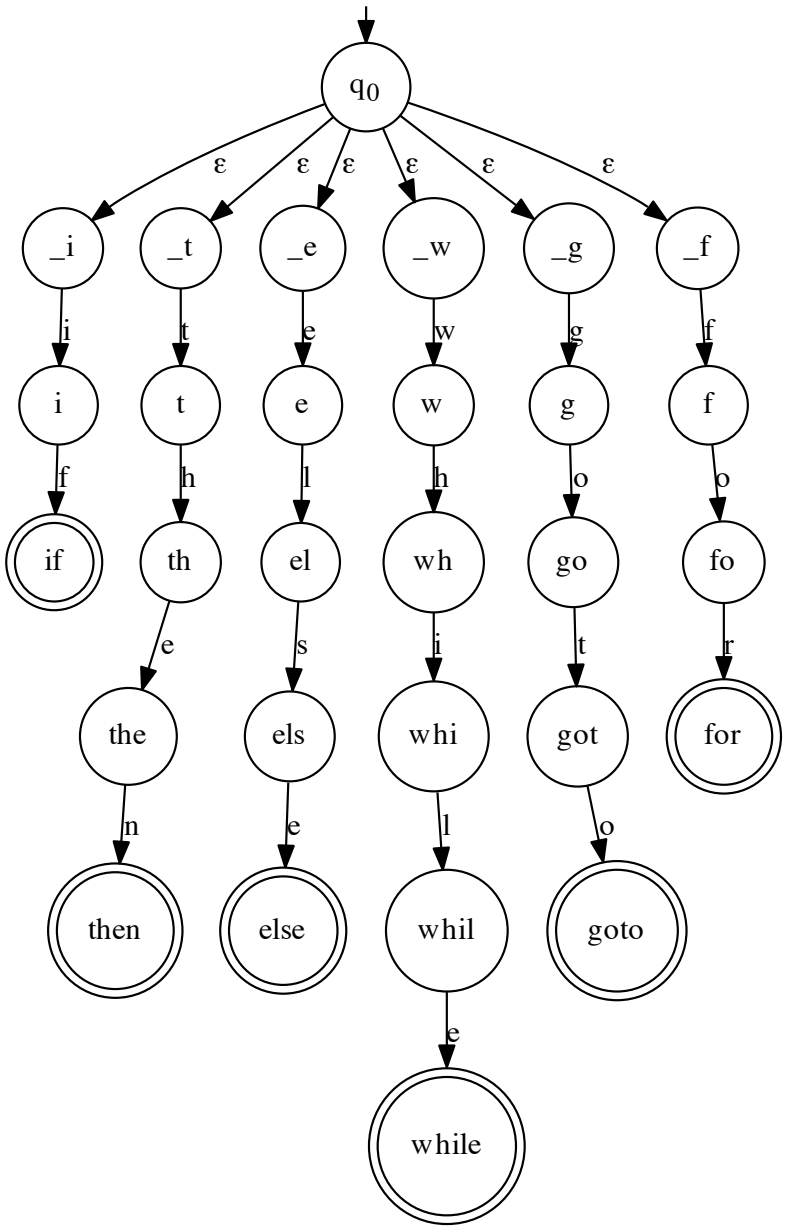

Decision problems

For regular languages L_1 and L_2 and a word w, answer the following questions:

- Is there a word in L_1? emptiness problem
- Is w an element of L_1? word problem
- Is L_1 equal to L_2? equivalence problem
- Is L_1 finite? finiteness problem

Emptiness problem

Emptiness problem

The emptiness problem for regular languages is decidable.

Algorithm: Let A be an automaton accepting the language L.

- Starting with the initial state q_0, mark all states to which there is a transition from q_0 as reachable.
- Continue with transitions from states which are already marked as reachable until either a final state is reached or no further states are reachable.
- If a final state is reachable, then $L \neq \emptyset$ holds.

Word problem

Word problem

The word problem for regular languages is decidable.

Algorithm: Let A be an NFA accepting the language L and $w = c_1 c_2 \ldots c_n$.

- Let Q_1 be the set of all states of A for which there is a transition from (q_0, c_1)
- Let $Q_1' = ec(Q_1)$
- Let Q_2 be the set of all states for which there is a transition (q, c_2) from a state $q \in Q_1'$.
- Continue until Q_n' is computed.
- If Q_n' contains a final state, A accepts w.

All we have to do is simulate the run of A on w.

Equivalence problem

Equivalence problem

The equivalence problem for regular languages is decidable.

We have already shown how to prove this using minimised DFAs for L_1 and L_2.

Alternative proof using closure properties and decidability of the emptiness problem:

$$L_1 = L_2 \text{ iff } \underbrace{(L_1 \cap \overline{L_2})}_{\text{words that are in } L_1\text{, but not in } L_2} \cup \underbrace{(\overline{L_1} \cap L_2)}_{\text{words that are not in } L_1\text{, but in } L_2} = \emptyset$$

Finiteness problem

We have already seen that every finite language is regular. Now we want to find out if a given regular language L is finite.

Finiteness problem

The Finiteness problem for regular languages is decidable.

If there is a loop in an accepting run, words of arbitrary length are accepted.

Let A be a DFA accepting L.

- Eliminate from A all states that are not reachable from the initial state, obtaining A_r.
- Eliminate from A_r all states from which no final state is reachable, obtaining A_f.
- A_f contains a loop iff L is infinite.

Disproving regularity: the pumping lemma

- Given a language L, the pumping lemma is a way to disprove the regularity of L.
- Informally, it says that sufficiently long words in L may be pumped to produce a new word within L.
- Here, pumping refers to the repetition of the middle section of the word.
- Formally, we have:
  - L is a regular language.
  - Then, there exists an integer $n \in \mathbb{N}$ such that all words $s \in L$ with a length greater than or equal to n can be split into three parts u, v, and w satisfying the following conditions:
    1. $s = uvw$,
    2. $v \neq \varepsilon$,
    3. $|uv| \leq n$,
    4. $\forall h \in \mathbb{N}(uv^h w \in L)$.

Pumping lemma - intuition

- Case 1: L is finite
  - Then there exists a longest word $w \in L$
  - Then $n = |w| + 1$ works trivially
- Case 2: L is infinite
  - There is a DFA A with $L(A) = A$ (because L is regular)
  - A has at most m states (it's a finite automaton)
  - When accepting a word w with more than m letters, A has to visit at least one state q more than once
  - Ergo there is a loop from q to q ...
  - ... and we can go through this loop any number of times!

The pumping lemma (cont.)

The pumping lemma can be written in a single formula as follows:

$$\begin{aligned} \mathrm{reg}(L) \quad \rightarrow \quad & \exists n \in \mathbb{N}\, \forall s \in L(|s| \geq n \rightarrow \exists u, v, w \in \Sigma^* \\ & (s = uvw \wedge v \neq \varepsilon \wedge |uv| \leq n \wedge \\ & \forall h \in \mathbb{N}(uv^h w \in L))) \end{aligned} \tag{101}$$

In order to disprove regularity of languages, this formula can be transformed into

$$\begin{aligned} \forall n \in \mathbb{N}\, \exists s \in L(|s| \geq n \wedge \forall u, v, w \in \Sigma^* \exists h \in \mathbb{N} \\ (\neg(s = uvw \wedge v \neq \varepsilon \wedge |uv| \leq n \wedge \\ uv^h w \in L))) \quad \rightarrow \quad \neg\mathrm{reg}(L) \end{aligned} \tag{102}$$

The pumping lemma: example

Given the alphabet $\Sigma = \{\,(\,,\,)\,\}$, we define a language L consisting of k opening brackets followed by k closing brackets:

$$L = \{\,(^k)^k | k \in \mathbb{N}\}. \tag{103}$$

According to Eq. 102, for all possible integers n, we need to find an $s \in L$ whose length is greater than or equal to n, e.g.

$$s = (^n)^n. \tag{104}$$

Now, we just have to show that there is no way to satisfy Conditions 1 to 4 with this s.

The pumping lemma: example (cont.)

Considering that $s = uvw$ (1), $|uv| \leq n$ (3), and $v \neq \varepsilon$ (2), we know that

$$u = (^{l}, \quad v = (^{m}, \quad w = (^{p})^{n} \tag{105}$$

with

$$l + m + p = n; m \geq 1 \tag{106}$$

i.e.

$$l + p \leq n - 1. \tag{107}$$

Now, if we are able to show that Condition 4 cannot be fulfilled, we are done.

The pumping lemma: example (cont.)

We need to show that

$$\neg\forall h \in \mathbb{N}(uv^h w \in L) \quad \text{or} \quad \exists h \in \mathbb{N}(uv^h w \notin L). \tag{108}$$

For $h = 0$, we would obtain the word

$$uw = (^{l+p})^{n} \tag{109}$$

According to Eq. 107, $l + p \neq n$, hence $uw \notin L$ which completes the proof that

$$\neg\text{reg}(L). \tag{110}$$

The pumping lemma: example (cont.)

In conclusion, we see that the language

$$L = \{ (^k) ^k | k \in \mathbb{N} \}. \tag{111}$$

is not regular. This means that

- regular languages are not capable of counting brackets;
- for most common programming languages, regular languages/grammars/expressions are not powerful enough.

In the following, we will learn more about context-free languages which are able to cope with most common programming languages.

The pumping lemma: exercise

We are given the language L comprising all the words of the form $\mathtt{a}^p$ where p is a prime number:

$$L = \{\mathtt{a}^p | p \in \mathbb{P}\}. \tag{112}$$

Prove that L is not a regular language.

Hint: let $h = p + 1$

Homework

- Assume $L_1 = \{a^n b^m | n, m \in \mathbb{N}, n > m\}$ and $L_2 = \{a^n b^m | n, m \in \mathbb{N}\}$
  - Is L_1 regular?
  - Is L_2 regular?
  - Prove your claims!
- Solve the exercise on page 86
- Bonus: Solve the equations on page 82

Review of Goals

- Refresher & Homework
- Equivalence of regular expressions
- Properties of regular languages
  - Closure properties
  - Decision problems
- Non-regular languages and the pumping lemma

Feedback round

- What was the best part of todays lecture?
- What part of todays lecture has the most potential for improvement?
  - Optional: how would you improve it?

Goals for Today

- ERASMUS+
- Refresher & Homework
- Real-world scanner
  - Compiler structure
  - Flex
  - Regular expressions - theory and practice

ERASMUS+

- ERASMUS+ fördert Praxisphasen im europäischen Ausland
  - Mindestens 60 Tage
  - Selbst gesuchte Praktika ok
  - Praktika bei Dualen Partnern oder Partnerfirmen ok
- Anmeldung bei geplanten Aufenthalten bis Juli 2015:
  - Ab sofort
  - Spätestens 15.12.2014!
- Weitere Information:
  - `https://eu.daad.de/neu/studierende/studierendenmobilitaet/de/14998-studierendenmobilitaet/`
  - Auslandsamt DHBW-Stuttgart, Frau Dorte Süchting

Refresher

- Equivalence of REs
  - RE$\Rightarrow$NFA$\Rightarrow$DFA$\Rightarrow$Unique Minimal DFA
- If L_1, L_2 are regular, then $L_1 \cup L_2$, $L_1 \cap L_2$, $L_1 \circ L_2$, $\overline{L_1}$, L_1^* are all regular
  - Proof: Construction of NFSs as per REs ($\cup, \circ, *$)
  - Proof: Product automaton ($\cap, \cup$)
  - Proof: Swap accepting/non-acceping states ($\overline{}$)
- Finite languages are regular (tree-like NFA)
- The following are decidable for regular languages:
  - Emptiness (reachbility analyis of DFA/NFA)
  - Word problem (just run automaton)
  - Equivalence (as per above)
  - Finiteness (check for loops in DFA)
- Pumping lemma
  - Regular languages can be pumped
  - Normally used to show that languages are not regular

Homework Discussion

- Assume $L_1 = \{a^n b^m | n, m \in \mathbb{N}, n > m\}$ and $L_2 = \{a^n b^m | n, m \in \mathbb{N}\}$
  - Is L_1 regular?
  - Is L_2 regular?
- Solution?
  - L_1 not regular, proof later
  - L_2 regular. E.g. $L_2 = L(a^* b^*)$
- Pumping lemma: Given a regular language L, there exists an integer $n \in \mathbb{N}$ such that all words $s \in L$ with $|s| \geq n$ can be split into three parts u, v, and w satisfying the following conditions:
  1. $s = uvw$,
  2. $v \neq \varepsilon$,
  3. $|uv| \leq n$,
  4. $\forall h \in \mathbb{N}(uv^h w \in L)$.

Homework: $L_1 = \{a^n b^m | n, m \in \mathbb{N}, n > m\}$ is not regular

- Proof: By contradiction (using the pumping lemma).
- Assumption: L_1 is regular.
- Then: $\exists n \in \mathbb{N}$ such that $\forall s \in L_1$ with $|s| \geq n$ $\exists u, v, w \in \Sigma^*$ with
  1. $s = uvw$,
  2. $v \neq \varepsilon$,
  3. $|uv| \leq n$,
  4. $\forall h \in \mathbb{N}(uv^h w \in L_1)$.
- Consider $s = a^n b^{n-1} \in L_1$
  - We know $|uv| \leq n$. Hence $u = a^i, v = a^j, w = a^k b^{n-1}$ and $i + j + k = n$, and $j \geq 1$ (because $v \neq \varepsilon$)
  - Now consider $s' = uv^0 w = a^i a^k b^{n-1} = a^{i+k} b^{n-1}$. Per pumping-lemma, $s' \in L_2$, and per definition of L_2 then $i + k > n - 1$, hence $i + k + 1 > n$
  - But $i + j + k = n$ and $j \geq 1$. Hence $i + k + 1 \leq n$
  - In summary: $i + k + 1 > n$ and $i + k + 1 \leq n$ $\lightning$
- The assumption leads to a contradiction, hence the assumption is wrong. Ergo: L_1 is not regular. q.e.d.

Lexical Analysis in Practice/Flex

Syntactic Structure of Computer Languages

- Most computer languages are mostly context-free
  - Regular: vocabulary
    - Keywords, operators, identifiers
    - Described by regular expressions or regular grammar
    - Handled by (generated or hand-written) scanner/tokenizer/lexer
  - Context-free: program structure
    - Matching parenthesis, block structure, algebraic expressions, . . .
    - Described by context-free grammar
    - Handled by (generated or hand-written) *parser*
  - Context-sensitive: e.g. declarations
    - Described by human-readable constraints
    - Handled in an ad-hoc fashion (e.g. symbol table)

Cautionary tale: ALGOL-68

Conway's Law

Organizations which design systems are constrained to produce designs which are copies of the communication structures of these organizations.

Melvin Conway, 1968

If you have four groups working on a compiler, you'll get a 4-pass compiler.

The Jargon File

If a group of N persons implements a COBOL compiler, there will be N-1 passes. Someone in the group has to be the manager.

Tom Cheatham

Compiler

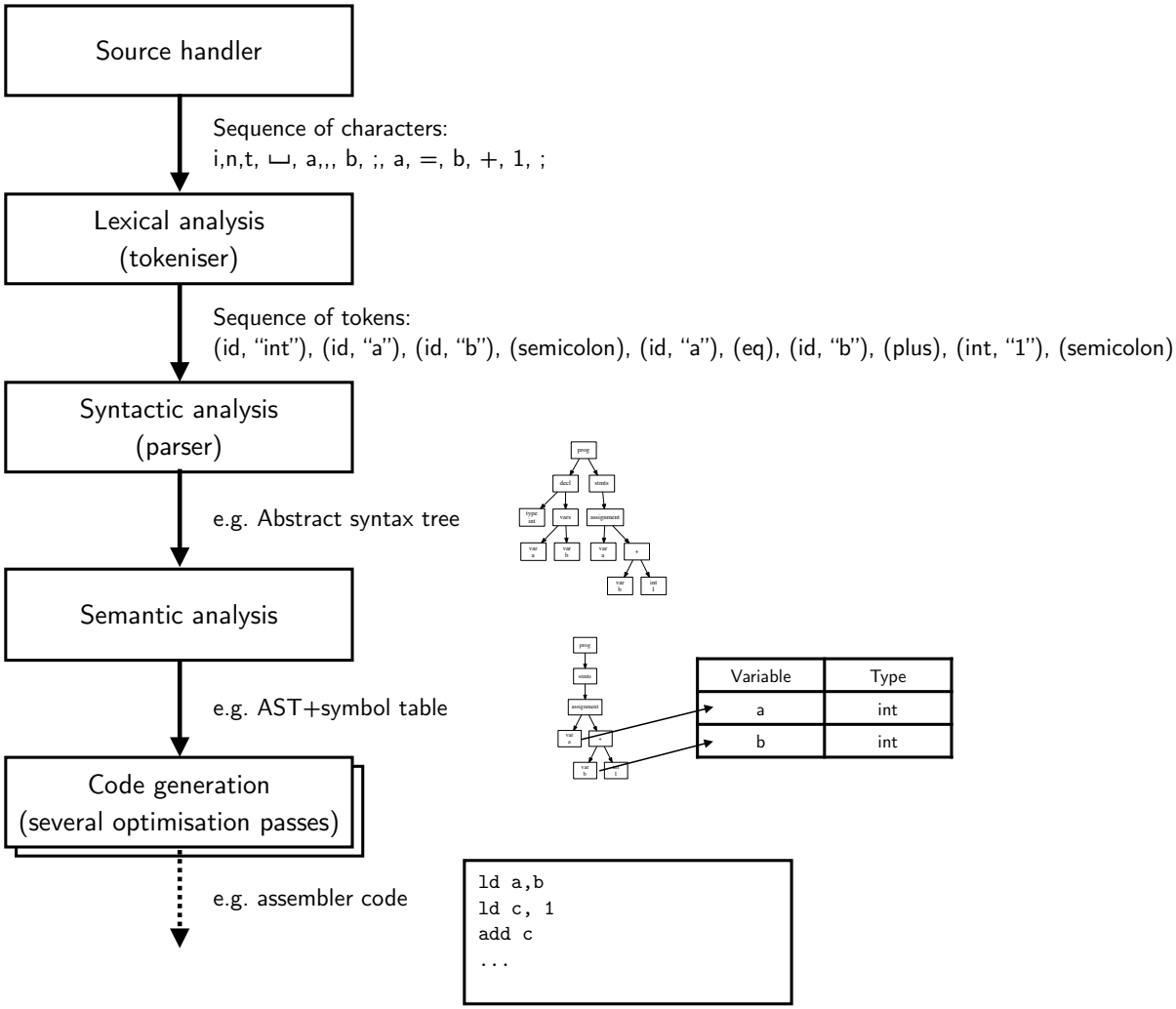
Source handler
Sequence of characters:
i,n,t, ␣, a,,, b, ;, a, =, b, +, 1, ;
Lexical analysis
(tokeniser)
Sequence of tokens:
(id, "int"), (id, "a"), (id, "b"), (semicolon), (id, "a"), (eq), (id, "b"), (plus), (int, "1"), (semicolon)
Syntactic analysis
(parser)
e.g. Abstract syntax tree
Semantic analysis
e.g. AST+symbol table
Variable
Type
a
int
b
int
Code generation
(several optimisation passes)
e.g. assembler code
ld a,b
ld c, 1
add c
...

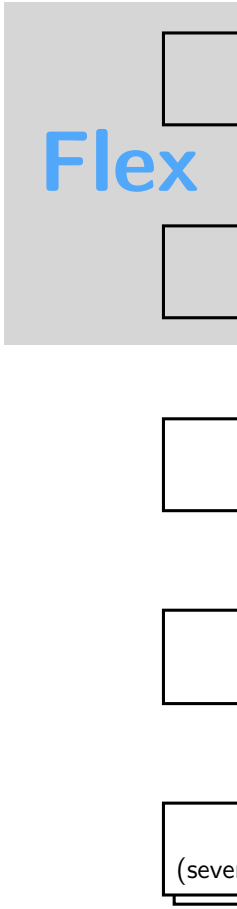
Flex

Flex Overview

- Flex is a scanner generator
- Input: Specification of a regular language and what to do with it
  - Definitions - named regular expressions
  - Rules - patters+actions
  - (miscellaneous support code)
- Output: Source code of scanner
  - Scans input for patterns
  - Executes associated actions
  - Default action: Copy input to output
  - Interface for higher-level processing: `yylex()` function

Flex Overview

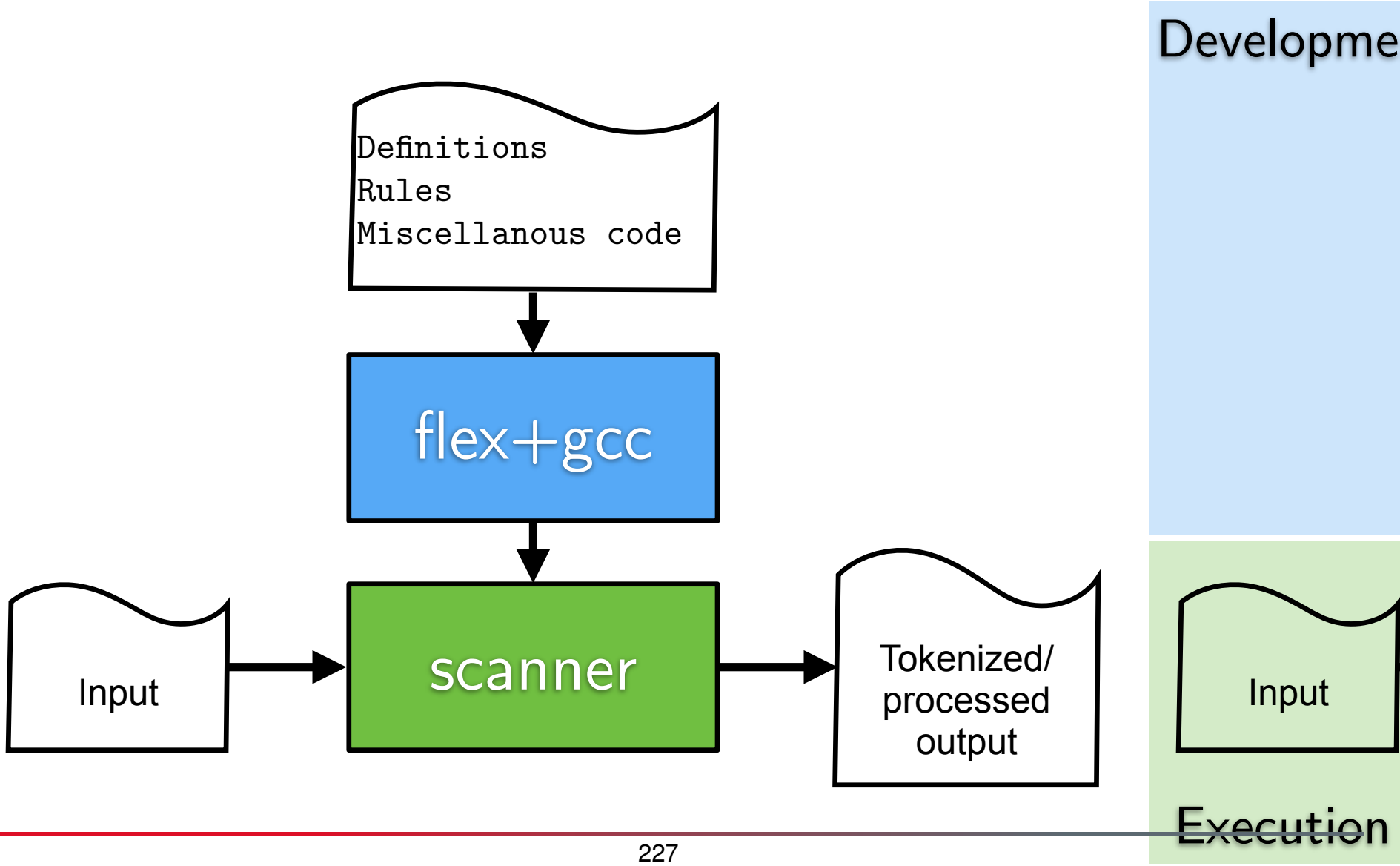

Flex Example Task

- (Artificial) goal: Sum up all numbers in a file, separately for ints and floats
- Given: A file with numbers and commands
  - Ints: Non-empty sequences of digits
  - Floats: Non-empty sequences of digits, followed by decimal dot, followed by (potentially empty) sequence of digits
  - Command `print`: Print current sums
  - Command `reset`: Reset sums to 0.
- At end of file, print sums

Flex Example Output

Input

```
12 3.1415
0.33333
print reset
2 11
1.5 2.5 print
1
print 1.0
```

Output

```
int:   12 ("12")
float: 3.141500 ("3.1415")
float: 0.333330 ("0.33333")
Current: 12 : 3.474830
Reset
int:   2 ("2")
int:   11 ("11")
float: 1.500000 ("1.5")
float: 2.500000 ("2.5")
Current: 13 : 4.000000
int:   1 ("1")
Current: 14 : 4.000000
float: 1.000000 ("1.0")
Final  14 : 5.000000
```

Flex Facts & Opinions

- `Flex`: **F**ast **Lex**ical Analyser
  - Original: `lex` (described 1975)
  - `flex` is `lex` compatible
- `Flex` input syntax seems wonky…
  - Basics are 40 years old!
  - Represents regular expressions and C code with the same alphabet in the same file
- On the other hand: It would not have survived 40 years if it didn't work!

Basic Structure of Flex Files

- Flex files have 3 sections
  - Definitions
  - Rules
  - User Code
- Sections are separated by `%%`
- Flex files traditionally use the suffix `.l`

Example Code (definition section)

```
%%option noyywrap

DIGIT    [0-9]

%{
   int    intval   = 0;
   double floatval = 0.0;
%}

%%
```

Example Code (rule section)

```
{DIGIT}+    {
               printf( "int:   %d (\"%s\")\n", atoi(yytext), yytext );
               intval += atoi(yytext);
            }
{DIGIT}+"."{DIGIT}*        {
            printf( "float: %f (\"%s\")\n", atof(yytext),yytext );
            floatval += atof(yytext);
            }
reset {
        intval = 0;
        floatval = 0;
        printf("Reset\n");
      }
print {
         printf("Current: %d : %f\n", intval, floatval);
      }
\n|. {
        /* Skip */
      }
```

Example Code (user code section)

```
%%
int main( int argc, char **argv )
{
   ++argv, --argc;  /* skip over program name */
   if ( argc > 0 )
      yyin = fopen( argv[0], "r" );
   else
      yyin = stdin;

   yylex();

   printf("Final  %d : %f\n", intval, floatval);
}
```

Generating a scanner

```
> flex  -t numbers.l > numbers.c
> gcc   -c -o numbers.o numbers.c
> gcc numbers.o -o scan_numbers
> ./scan_numbers Numbers.txt
int:   12 ("12")
float: 3.141500 ("3.1415")
float: 0.333330 ("0.33333")
Current: 12 : 3.474830
Reset
int:   2 ("2")
int:   11 ("11")
float: 1.500000 ("1.5")
float: 2.500000 ("2.5")
...
```

Flexing in detail

```
> flex -tv numbers.l > numbers.c
  scanner options: -tvI8 -Cem
  37/2000 NFA states
  18/1000 DFA states (50 words)
  5 rules
  Compressed tables always back-up
  1/40 start conditions
  20 epsilon states, 11 double epsilon states
  6/100 character classes needed 31/500 words
        of storage, 0 reused
  36 state/nextstate pairs created
  24/12 unique/duplicate transitions
  ...
  381 total table entries needed
```

Definition Section

- Can contain `flex` options
- Can contain (C) initialization code
  - Typically `#include()` directives
  - Global variable defintions
  - Macros and type definitions
  - Initialization code is embeded in `%{` and `%}`
- Can contain definitions of regular expressions
  - Format: `NAME RE`
  - Defined NAMES can be referenced later

Regular Expressions in Practice (1)

- The minimal syntax of regular expressions as discussed before was introduced to be able to show their equivalence to finite state machines
- Practical implementations of regular expressions (e.g. in Flex) use a richer and more powerful syntax.
- Regular expressions in Flex are based on the ASCII alphabet.
- We distinguish between the set of operator symbols

$$O = \{\texttt{.}, \texttt{*}, \texttt{+}, \texttt{?}, \texttt{-}, \texttt{\~{}}, \texttt{|}, \texttt{(}, \texttt{)}, \texttt{[}, \texttt{]}, \{, \}, <, >, \texttt{/}, \texttt{\textbackslash}, \texttt{\^{}}, \texttt{\$}, \texttt{"}\} \tag{113}$$

and the set of regular expressions

1. $c \in \Sigma_{\text{ASCII}} \backslash O \longrightarrow c \in R$
2. "`.`" $\in R$
   any character but newline (`\n`)

Regular Expressions in Practice (2)

3. $x \in \{\texttt{a}, \texttt{b}, \texttt{f}, \texttt{n}, \texttt{r}, \texttt{t}, \texttt{v}\} \longrightarrow \backslash x \in R$
   defines the following control characters

   `\a` (alert)
   `\b` (backspace)
   `\f` (form feed)
   `\n` (newline)
   `\r` (carriage return)
   `\t` (tabulator)
   `\v` (vertical tabulator)

   $a, b, c \in \{\texttt{0}, \cdots, \texttt{7}\} \longrightarrow \backslash abc \in R$ octal representation of a character's ASCII code (e.g. `\040` represents the empty space " ")

Regular Expressions in Practice (3)

5. $c \in O \longrightarrow \backslash c \in R$
   escaping operator symbols
   $r_1, r_2 \in R \longrightarrow r_1 r_2 \in R$
   concatenation
   $r_1, r_2 \in R \longrightarrow r_1 \mid r_2 \in R$
   infix operation using "$\mid$" rather than "$+$"
   $r \in R \longrightarrow r\star \in R$
   Kleene star
   $r \in R \longrightarrow r+ \in R$
   (one or more or r)
   $r \in R \longrightarrow r? \in R$
   optional presence (zero or one r)

Regular Expressions in Practice (4)

11. $r \in R, n \in \mathbb{N} \longrightarrow r\{n\} \in R$
    concatenation of n times r
    $r \in R;\ m, n \in \mathbb{N};\ m \leq n \longrightarrow r\{m, n\} \in R$
    concatenation of between m and n times r
    $r \in R \longrightarrow \hat{}\, r \in R$
    r has to be at the beginning of line
    $r \in R \longrightarrow r\$ \in R$
    r has to be at the end of line
    $r_1, r_2 \in R \longrightarrow r_1 / r_2 \in R$
    The same as $r_1 r_2$, however, only the contents of r_1 is consumed.
    The trailing context r_2 can be processed by the next rule.
    $r \in R \longrightarrow (r) \in R$
    Grouping regular expressions with brackets.

Regular Expressions in Practice (5)

17. Ranges
    - `[aeiou]` $\doteq$ `a|e|i|o|u`
    - `[a-z]` $\doteq$ `a|b|c|`$\cdots$`|z`
    - `[a-zA-Z0-9]`: alphanumeric characters
    - `[^0-9]`: all ASCII characters w/o digits

    `[ ]` $\in R$
    empty space
    $w \in \{\Sigma_{\text{ASCII}} \backslash \{\backslash, \texttt{"}\}\}^* \longrightarrow \texttt{"}w\texttt{"} \in R$
    verbatim text (no escape sequences)

Regular Expressions in Practice (6)

21. $r \in R \longrightarrow \tilde{}r \in R$
    The upto operator matches the shortest string ending with r.
    predefined character classes
22.
    - `[:alnum:]` `[:alpha:]` `[:blank:]`
    - `[:cntrl:]` `[:digit:]` `[:graph:]`
    - `[:lower:]` `[:print:]` `[:punct:]`
    - `[:space:]` `[:upper:]` `[:xdigit:]`

Regular Expressions in Practice (precedences)

I. "`(`", "`)`" (strongest)
II. "`*`", "`+`", "`?`"
III. concatenation
IV. "`|`" (weakest)

Example:

`a*b|c+de` $\doteq$ `((a*)b)|(((c+)d)e)`

Rule of thumb: `*`, `+`, `?` bind the smallest possible RE.
Use () if in doubt!

Regular Expressions in Practice (definitions)

- Assume definiton `NAME DEF`
  - In later REs. {`NAME`} is expanded to `(DEF)`
- Example:

```
DIGIT   [0-9]
INTEGER {DIGIT}+
PAIR    \({INTEGER},{INTEGER}\)
```

Example Code (definition section) (revisited)

```
%%option noyywrap

DIGIT    [0-9]

%{
   int    intval   = 0;
   double floatval = 0.0;
%}


%%
```

- Assume we work over Σ_{ascii}
- How would you express the following practical REs using only the simple REs we have used so far?
  - `[a-z]`
  - `[^0-9]`
  - `(r)+`
  - `(r){3}`
  - `(r){3,7}`
  - `(r)?`

Rule Section

- This is the core of the scanner!
- Rules have the form `PATTERN ACTION`
- Patterns are regular expressions
  - Typically use previous definitions
- THERE IS WHITE SPACE BETWEEN PATTERN AND ACTION!
- Actions are C code
  - Can be embedded in { and }
  - Can be simple C statements
  - For a token-by-token scanner, must include `return` statement
  - Inside the action, the variable `yytext` contains the text matched by the pattern
  - Otherwise: Full input file is processed

Example Code (rule section) (revisited)

```
{DIGIT}+    {
               printf( "int:   %d (\"%s\")\n", atoi(yytext), yytext );
               intval += atoi(yytext);
            }
{DIGIT}+"."{DIGIT}*        {
            printf( "float: %f (\"%s\")\n", atof(yytext),yytext );
            floatval += atof(yytext);
            }
reset {
        intval = 0;
        floatval = 0;
        printf("Reset\n");
      }
print {
         printf("Current: %d : %f\n", intval, floatval);
      }
\n|. {
        /* Skip */
      }
```

User code section

- Can contain all kinds of code
- For stand-alone scanner: must include `main()`
- In `main()`, the function `yylex()` will invoke the scanner
- `yylex()` will read data from the file pointer `yyin` (so `main()` must set it up reasonably

Example Code (user code section) (revisited)

```
%%
int main( int argc, char **argv )
{
   ++argv, --argc;  /* skip over program name */
   if ( argc > 0 )
      yyin = fopen( argv[0], "r" );
   else
      yyin = stdin;

   yylex();

   printf("Final  %d : %f\n", intval, floatval);
}
```

A comment on comments

- Comments in Flex are complicated
  - . . . because nearly everything can be a pattern
- Simple rules:
  - Use old-style C comments `/* This is a comment */`
  - Never start them in the first column
  - Comments are copied into the generated code
  - Read the manual if you want the dirty details

Flex Miscellany

- Flex online:
  - `http://flex.sourceforge.net/`
  - Manual: `http://flex.sourceforge.net/manual/`
  - REs:
    `http://flex.sourceforge.net/manual/Patterns.html`
- `make` knows `flex`
  - Make will automatically generate `file.o` from `file.l`
  - Be sure to set `LEX=flex` to enable `flex` extensions
  - `Makefile` example:

```
LEX=flex
all: scan_numbers
numbers.o: numbers.l

scan_numbers: numbers.o
        gcc numbers.o -o scan_numbers
```

Flex Homework (1)

- A security audit firm needs a tool that scans documents for the following:
  - Email addesses
    - Fomat: String over `[A-Za-z0-9_.~-]`, followed by `@`, followed by a domain name according to RFC-1034, `https://tools.ietf.org/html/rfc1034`, Section 3.5 (we only consider the case that the domain name is not empty)
  - (simplified) Web addresses
    - `http://` followed by an RFC-1034 domain name, optionally followed by `:<port>` (where `<port>` is a non-empty sequence of digits), optionally followed by one or several parts of the form `/<str>`, where `<str>` is a non-empty sequence over `[A-Za-z0-9_.~-]`

Flex Homework (2)

- Bank account numbers
  - Old-style bank account numbers start with an identifying string, optionally followed by `.`, optionally followed by `:`, optionally followed by spaces, followed by a non-empty sequence of up to 10 digits. Identifying strings are `Konto`, `Kto`, `KNr`, `Ktonr`, `Kontonummer`
  - (German) IBANs are strings starting with `DE`, followed by exactly 20 digits. Human-readable IBANs have spaces after every 4 characters (the last group has only 2 characters)
- Examples:
  - `Rosenda@gidwd-39.at.z8o3rw2.zhv`
  - `http://jzl.j51g.m-x95.vi5/oj1g_i1/72zz_gt68f`
  - `http://iefbottw99.v4gy.zslu9q.zrc2es01nr.dy:8004`
  - `Ktonr. 241524`
  - `DE26959558703965641174`
  - `DE27 0192 8222 4741 4694 55`

Flex Homework (3)

- Erstellen Sie ein solches Programm
- Würde Sie so ein Auftrag nachdenklich machen? Warum oder warum nicht?
- Beispieldateien zum Testen gibt es auf der Kurswebseite `http://wwwlehre.dhbw-stuttgart.de/~sschulz/fla2014.html`

Review of Goals

- ERASMUS+
- Refresher & Homework
- Real-world scanner
  - Compiler structure
  - Flex
  - Regular expressions - theory and practice

Feedback round

- What was the best part of todays lecture?
- What part of todays lecture has the most potential for improvement?
  - Optional: how would you improve it?

Goals for Today

- Refresher & Homework
- Formal Grammars
  - Definition
  - The Chomsky Hierarchy
  - Regular languages and right-linear grammars
  - Context-free grammars
    - Normal forms

Refresher

- Structure of programming languages and compilers
  - Regular vocabulary/Scanner
  - Context-free program structure/Parser
  - Context-sensitive constraints/Special hacks ;-)
  - . . . and then code generation
- Flex overview
  - Input: Patters (REs)+Actions(C code)
  - Output: Scanner in C
  - Flex workflow
- Example: Scanning and adding numbers
- Practical regular expressions
  - Ranges [...], $+$, repetitions, . . .

Flex Homework discussion

- A security audit firm needs a tool that scans documents for the following:
  - Email addesses
  - Web addresses
  - Bank account numbers
- Develop the required program
- Would such an request make you think? Why or why not?

Formal Grammars: Motivation

So far, we have seen

- regular expressions: compact description of regular languages
- finite automata: recognise words of a regular language

Another, more powerful formalism: formal grammars

- generate words of a language
- contain a set of rules allowing to replace symbols with different symbols

Grammars: examples

$S \to aA, \quad A \to bB, \quad B \to \varepsilon$
generates ab (starting from S): $S \to aA \to abB \to ab$

$S \to \varepsilon, \quad S \to aSb$
generates $a^n b^n$

Grammars: definition

Noam Chomsky defined a grammar as a quadruple

$$G = \langle V_N, V_T, P, S \rangle \tag{114}$$

with

1. the set of non-terminal symbols V_N,
2. the set of terminal symbols V_T,
3. the set of production rules P of the form

$$\alpha \rightarrow \beta \tag{115}$$

$$\text{with} \quad \alpha \in V^* V_N V^*, \beta \in V^*, V = V_N \cup V_T$$

4. the distinguished start symbol $S \in V_N$.

Noam Chomsky (*1928)

- Linguist, philosopher, logician, . . .
- BA, MA, PhD (1955) at the Univeristy of Pennsylvania
- Mainly teaching at MIT (since 1955)
  - Also Harvard, Columbia University, Institute of Advanced Studie (Princeton), UC Berkely, . . .
- Opposition to Vietnam War, Essay *The Responsibility of Intellectuals*
- Most cited academic (1980-1992)
- “World’s top public intellectual” (2005)
- More than 40 honorary degrees

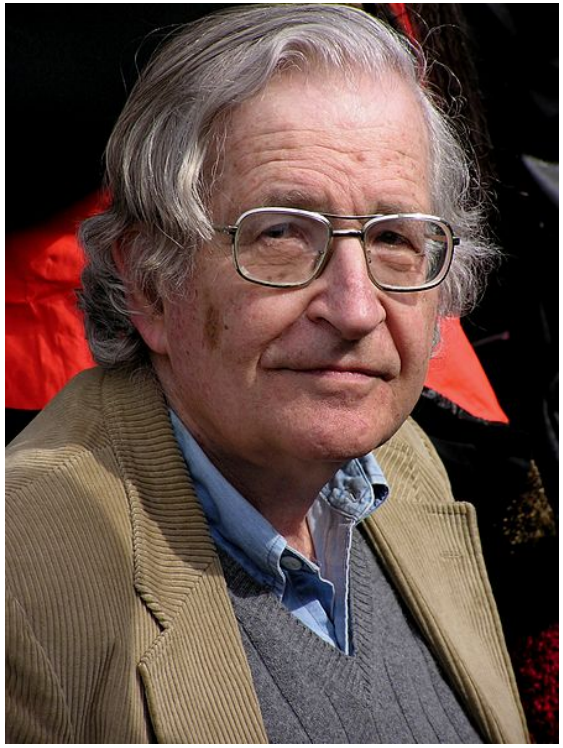

Grammars: Shorthand

For the sake of simplicity, we will be using the short form

$$\alpha \to \beta_1 | \cdots | \beta_n \quad \text{replacing} \quad \begin{array}{l} \alpha \to \beta_1 \\ \vdots \\ \alpha \to \beta_n \end{array} \tag{116}$$

Example: C identifiers

We want to define a grammar

$$G = \langle V_N, V_T, P, S \rangle \tag{117}$$

to describe identifiers of the C programming language:

- alpha-numeric words
- which must not start with a digit
- and may contain an underscore (_)

$V_N = \{I, R, L, D\}$ (identifier, rest, letter, digit),

$V_T = \{\mathtt{a}, \cdots, \mathtt{z}, \mathtt{A}, \cdots, \mathtt{Z}, \mathtt{0}, \cdots, \mathtt{9}, \mathtt{\_}\}$,

$$P = \{ \quad \begin{array}{rcl} I & \rightarrow & LR|\mathtt{\_}R|L|\mathtt{\_} \\ R & \rightarrow & LR|DR|\mathtt{\_}R|L|D|\mathtt{\_} \\ L & \rightarrow & \mathtt{a}|\cdots|\mathtt{z}|\mathtt{A}|\cdots|\mathtt{Z} \\ D & \rightarrow & \mathtt{0}|\cdots|\mathtt{9}\} \end{array}$$

$S = I$.

Formal grammars: derivation

Derivation: description of operation of grammars
Given the grammar

$$G = \langle V_N, V_T, P, S \rangle, \tag{118}$$

we define the relation

$$x \Rightarrow_G y \tag{119}$$

$$\text{iff } \exists u, v, p, q \in V^* : (x = upv) \wedge (p \to q \in P) \wedge (y = uqv) \tag{120}$$

pronounced as "*G* derives *y* from *x* in one step".
We also define the relation

$$x \Rightarrow_G^* y \text{ iff } \exists w_0, \ldots, w_n \tag{121}$$

$$\text{with } w_0 = x, w_n = y, w_{i-1} \Rightarrow_G w_i \text{ for } i \in \{1, \cdots, n\}$$

pronounced as "*G* derives *y* from *x* (in zero or more steps)".

Formal grammars: derivation example I

$$G = \langle V_N, V_T, P, S \rangle \tag{122}$$

with

1. $V_N = \{S\}$,
2. $V_T = \{0\}$,
3. $P = \{S \to 0S, \quad S \to 0\}$,
4. $S = S$.

Derivations of G have the general form

$$S \Rightarrow 0S \Rightarrow 00S \Rightarrow \cdots \Rightarrow 0^{n-1}S \Rightarrow 0^n \tag{123}$$

Apparently, the language produced by G (or the language of G) is

$$L(G) = \{0^n | n \in \mathbb{N}; n > 0\}. \tag{124}$$

Formal grammars: derivation example II

$$G = \langle V_N, V_T, P, S \rangle \tag{125}$$

with

1. $V_N = \{S\}$,
2. $V_T = \{\mathtt{0}, \mathtt{1}\}$,
3. $P = \{S \to \mathtt{0}S\mathtt{1}, \quad S \to \mathtt{01}\}$,
4. $S = S$.

Derivations of G have the general form

$$S \Rightarrow \mathtt{0}S\mathtt{1} \Rightarrow \mathtt{00}S\mathtt{11} \Rightarrow \cdots \Rightarrow \mathtt{0}^{n-1}S\mathtt{1}^{n-1} \Rightarrow \mathtt{0}^n\mathtt{1}^n. \tag{126}$$

The language of G is

$$L(G) = \{\mathtt{0}^n\mathtt{1}^n | n \in \mathbb{N}; n > 0\}. \tag{127}$$

Reminder: L(G) is not regular!

Formal grammars: derivation example III

$$G = \langle V_N, V_T, P, S \rangle \tag{128}$$

with

1. $V_N = \{S, B, C\}$,
2. $V_T = \{\mathtt{0}, \mathtt{1}, \mathtt{2}\}$,
3. P:

$$\begin{aligned} S &\rightarrow \mathtt{0}SBC && 1 \\ S &\rightarrow \mathtt{0}BC && 2 \\ CB &\rightarrow BC && 3 \\ \mathtt{0}B &\rightarrow \mathtt{01} && 4 \\ \mathtt{1}B &\rightarrow \mathtt{11} && 5 \\ \mathtt{1}C &\rightarrow \mathtt{12} && 6 \\ \mathtt{2}C &\rightarrow \mathtt{22} && 7 \end{aligned}$$

4. $S = S$.

Formal grammars: derivation example III (cont.)

Derivations of G have the general form

$$S \Rightarrow_1 \mathtt{0}SBC \Rightarrow_1 \mathtt{00}SBCBC \Rightarrow_1 \cdots \Rightarrow_1 \mathtt{0}^{n-1}S(BC)^{n-1} \Rightarrow_2 \mathtt{0}^n(BC)^n$$

$$\Rightarrow_3^* \mathtt{0}^n B^n C^n \Rightarrow_{4,5}^* \mathtt{0}^n \mathtt{1}^n C^n \Rightarrow_{6,7}^* \mathtt{0}^n \mathtt{1}^n \mathtt{2}^n \tag{129}$$

The language of G is

$$L(G) = \{\mathtt{0}^n \mathtt{1}^n \mathtt{2}^n | n \in \mathbb{N}; n > 0\}. \tag{130}$$

- These three derivation examples represent different classes of grammars or languages characterized by different properties.
- A widely used classification scheme of formal grammars and languages is the Chomsky hierarchy (1956).

The Chomsky hierarchy (0)

Given the grammar

$$G = \langle V_N, V_T, P, S \rangle, \tag{131}$$

we define the following grammar/language classes

- G is of Type 0 or *unrestricted*

All grammars are Type 0!

The Chomsky hierarchy (1)

$$G = \langle V_N, V_T, P, S \rangle, \tag{132}$$

- G is Type 1 or *context-sensitive*
  if all productions are of the form

$$\alpha_1 A \alpha_2 \to \alpha_1 \beta \alpha_2 \text{ with } A \in V_N; \alpha_1, \alpha_2 \in V^*, \beta \in VV^* \tag{133}$$

  Exception:

$$S \to \varepsilon \in P \text{ is allowed if}$$

$$\alpha_1, \alpha_2 \in (V \backslash \{S\})^* \text{ and } \beta \in (V \backslash \{S\})(V \backslash \{S\})^* \tag{134}$$

  - If $S \to \varepsilon \in P$, then S is not allowed in any right hand side
  - Consequence: Rules (almost) never derive shorter words

The Chomsky hierarchy (2)

$$G = \langle V_N, V_T, P, S \rangle \tag{135}$$

- G is of Type 2 or *context-free*
  if all productions are of the form

$$A \to \beta \text{ with } A \in V_N; \beta \in VV^* \tag{136}$$

  Exception:

$$S \to \varepsilon \in P \text{ is allowed, if } \beta \in (V \backslash \{S\})(V \backslash \{S\})^* \tag{137}$$

  - Only single non-terminals are replaced
  - If $S \to \varepsilon \in P$, then S is not allowed in any right hand side

The Chomsky hierarchy (3)

$$G = \langle V_N, V_T, P, S \rangle \tag{138}$$

- G is of Type 3 or *right-linear* (*regular*) if all productions are of the form

$$A \to aB \text{ or} \tag{139}$$

$$A \to a \text{ with } A, B \in V_N; a \in V_T$$

Exception:

$$S \to \varepsilon \in P \text{ is allowed, if } B \in V_N \backslash \{S\} \tag{140}$$

Formal grammars vs. formal languages vs. machines

For each grammar/language type, there is a corresponding type of machine model:

grammar	language	machine
Type 0	unrestricted	Turing machine
Type 1	context-sensitive	linear-bounded non-deterministic Turing machine
Type 2	context-free	non-deterministic pushdown automaton
Type 3	regular	finite automaton

The Chomsky hierarchy

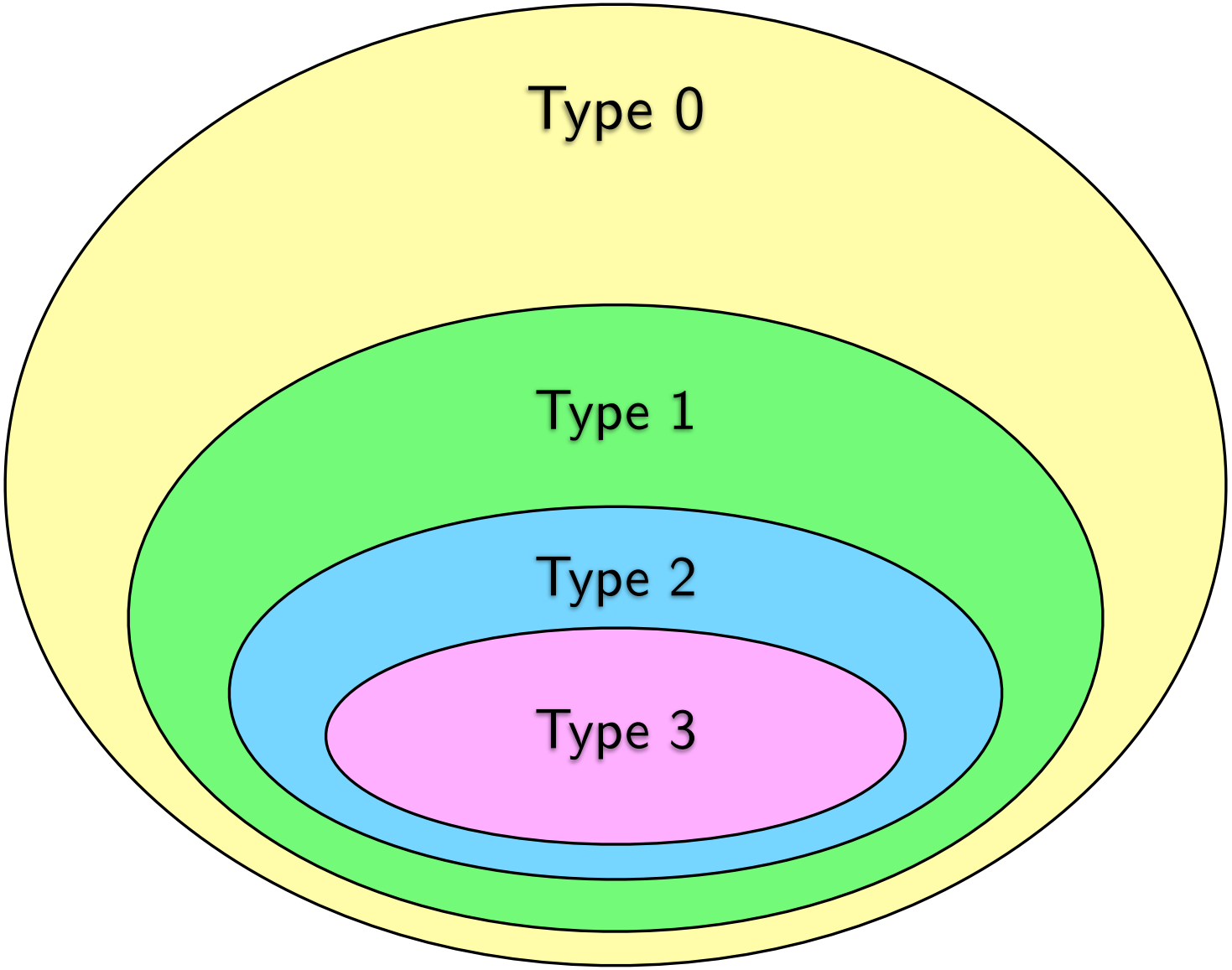

The Chomsky hierarchy: examples

Returning to our example with identifiers of the `C` programming language:

$$
\begin{array}{rrcl}
P: & I & \rightarrow & LR|\_R|L|\_ \\
 & R & \rightarrow & LR|DR|\_R|L|D|\_ \\
 & L & \rightarrow & \mathtt{a}|\cdots|\mathtt{z}|\mathtt{A}|\cdots|\mathtt{Z} \\
 & D & \rightarrow & \mathtt{0}|\cdots|\mathtt{9}
\end{array}
$$

This grammar is context-free but not regular.
An equivalent regular grammar could have the following productions:

$$
\begin{array}{rrcl}
P: & I & \rightarrow & \mathtt{A}|\cdots|\mathtt{Z}|\mathtt{a}|\cdots|\mathtt{z}|\_| \\
 & & & \mathtt{A}R|\cdots|\mathtt{Z}R|\mathtt{a}R|\cdots|\mathtt{z}R|\_R \\
 & R & \rightarrow & \mathtt{A}|\cdots|\mathtt{Z}|\mathtt{a}|\cdots|\mathtt{z}|\_|\mathtt{0}|\cdots|\mathtt{9}| \\
 & & & \mathtt{A}R|\cdots|\mathtt{Z}R|\mathtt{a}R|\cdots|\mathtt{z}R|\_R|\mathtt{0}R|\cdots|\mathtt{9}R
\end{array}
$$

The Chomsky hierarchy: examples (cont.)

Returning to the three derivation examples:

I

- The grammar with $P = \{\langle S \to \mathtt{0}S\rangle, \langle S \to \mathtt{0}\rangle\}$ is regular.
- So is the produced language $L = \{\mathtt{0}^n | n \in \mathbb{N}; n > 0\}$.

II

- The grammar with $P = \{\langle S \to \mathtt{0}S\mathtt{1}\rangle, \langle S \to \mathtt{01}\rangle\}$ is context-free.
- So is the produced language $L = \{\mathtt{0}^n\mathtt{1}^n | n \in \mathbb{N}; n > 0\}$.

The Chomsky hierarchy: examples (cont.)

III

- The last grammar is unrestricted.
- The only production preventing the grammar from being context-sensitive is $CB \to BC$.
- We can, however, replace this production by the three context-sensitive productions

$$\begin{aligned} CB &\to CX \\ CX &\to BX \\ BX &\to BC \end{aligned} \tag{141}$$

  without changing the grammar's behavior.
- The resulting grammar is context-sensitive.
- So is the language $L = \{\mathtt{0}^n\mathtt{1}^n\mathtt{2}^n | n \in \mathbb{N}; n > 0\}$.

$$G = \langle V_N, V_T, P, S \rangle \tag{142}$$

with

1. $V_N = \{S, A, B\}$,
2. $V_T = \{0\}$,
3. P :

$$\begin{array}{rcll} S & \to & \varepsilon & 1 \\ S & \to & ABA & 2 \\ AB & \to & 00 & 3 \\ 0A & \to & 000A & 4 \\ A & \to & 0 & 5 \end{array}$$

4. $S = S$.

a) What is G's highest type?
b) Show how G derives the word 00000.
c) Formally describe the language $L(G)$.
d) Define a regular grammar G' equivalent to G.

An octal constant is a finite sequence of digits starting with `0` followed by at least one digit ranging from `0` to `7`. Define a regular grammar encoding exactly the set of possible octal constants.

$$G = \langle V_N, V_T, P, S \rangle \tag{143}$$

with

1. $V_N = \{S, N, E\}$,
2. $V_T = \{\mathtt{0}, \mathtt{1}, \mathtt{t}\}$,
3. P :

$S \to \mathtt{0}NS$	1		$N\mathtt{0} \to \mathtt{0}N$	6
$S \to \mathtt{1}ES$	2		$N\mathtt{1} \to \mathtt{1}N$	7
$S \to \mathtt{t}$	3		$E\mathtt{0} \to \mathtt{0}E$	8
$N\mathtt{t} \to \mathtt{t0}$	4		$E\mathtt{1} \to \mathtt{1}E$	9
$E\mathtt{t} \to \mathtt{t1}$	5			

4. $S = S$.

a) What is G's highest type?

b) Formally describe the language $L(G)$.

Regular languages and regular grammars

Equivalence of regular languages and regular grammars

The class of regular languages (generated by regular expressions, accepted by finite automata) is exactly the class of languages generated by regular grammars.

- Idea for proof?
  - Convert DFA to regular grammar
  - Convert regular grammar to NFA

DFA$\Longrightarrow$regular grammar

Algorithm for transforming a DFA $A = (Q, \Sigma, \delta, q_0, F)$ into a grammar V_N, V_T, P, S:

- $V_N = Q$
- $V_T = \Sigma$
- $S = q_0$
- $P = \{p \to aq \mid (p, a, q) \in \delta\} \quad \cup$
  $\{p \to a \mid (p, a, q) \in \delta \text{ for any } q \in F\}$

Regular grammars and FAs: exercise

- Consider the following DFA A:

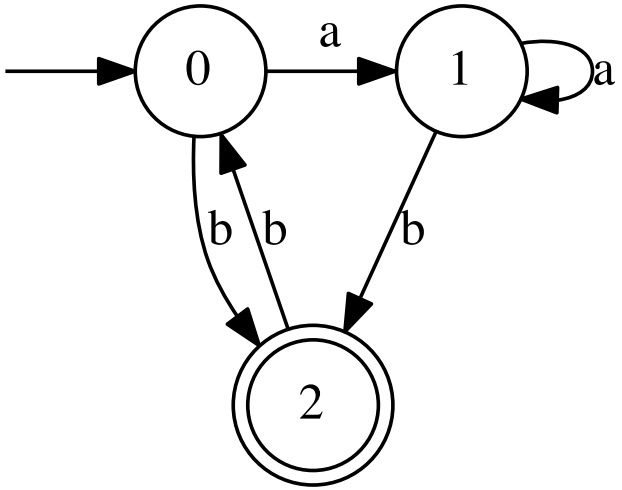

- Give a formal definition of A
- Generate a regular grammar G with $L(G) = L(A)$

Regular grammar$\Longrightarrow$NFA

Algorithm for transforming a grammar V_N, V_T, P, S into an NFA $A = (Q, \Sigma, \delta, q_0, F)$:

- $Q = V_N \cup \{q_f\} \quad (q_f \notin V_N)$
- $\Sigma = V_T$
- $q_0 = S$
- $F = \{q_f\}$
- $\delta = \{(A, c, B) \mid A \to cB \in P\} \quad \cup$
  $\{(A, c, q_f) \mid A \to c \in P\}$

Context-free grammars

- Reminder: $G = \langle V_N, V_T, P, S \rangle$ is context-free, if all $l \to r \in P$ are of the form $A \to \beta$ with
  - $A \in V_N$ and $\beta \in VV^*$
  - (special case: $S \to \epsilon \in P$, then S is not allowed in any β)
- Context-free languages/grammars are highly relevant
  - Core of most programming languages
  - Algebraic expressions
  - XML
  - Many aspects of human language

Context-free grammars: equivalency and normal forms

As for automata / regular expressions, two context-free grammars are called (weakly) equivalent if they generate the same language.

We will now compute grammars that are equivalent to some given G but have “nicer” properties

- Reduced grammars contain no unproductive symbols
- Grammars in Chomsky normal form support efficient (and very efficient) solution of the word problen

Context-free grammars: Reduced grammars

For a context-free grammar G, G_r is the equivalent reduced grammar, which contains only reachable and terminating symbols.

The reachable symbols can be computed as follows:

- $R := \{S\}$
- for every $N \in R$, add all symbols M for which there is a rule $N \to V^* M V^*$
- when no further symbols can be added, R contains exactly the reachable symbols

Context-free grammars: Reduced grammars (cont.)

The terminating symbols can be computed as follows:

- $T := \{N \in V_T \mid \exists w \in V_T^* : N \to w \in P\}$
- add all symbols M to T for which there exists a rule $M \to D$ and all non-terminal symbols in D are also contained in T
- when no further symbols can be added, R contains exactly the reachable symbols

Removal of (a) non-terminating and (b) unreachable symbols (and the corresponding production rules) generates the reduced grammar G_r:

- generate the grammar G_T by removing all non-terminating symbols (and rules containing them) from G
- generate the grammar G_r by removing all unreachable symbols (and rules containing them) from G_T

Sequence is important: symbols can become unreachable through removal of non-terminating symbols.

Reachable and terminating symbols: example

$$G = \langle V_N, V_T, P, S \rangle \tag{144}$$

with

1. $V_N = \{S, A, B, C\}$,
2. $V_T = \{\mathtt{a}, \mathtt{b}\}$,
3. P :

$$\begin{aligned} S &\rightarrow A|aS|C \\ A &\rightarrow a \\ B &\rightarrow aa \\ C &\rightarrow aCb \end{aligned}$$

4. $S = S$.

- B is not reachable.
- C does not terminate.

Reachable and terminating symbols: exercise CHTR

Compute the reduced grammar $G = (V_N, V_T, P, S)$ for the following grammar $G' = (V'_N, V'_T, P', S')$:

1. $V'_N = \{S, A, B, C, D\}$,
2. $V'_T = \{\mathtt{a}, \mathtt{b}\}$,
3. P' :

$$
\begin{array}{lcl}
S & \rightarrow & A|aS|B \\
A & \rightarrow & a \\
A & \rightarrow & AS \\
A & \rightarrow & Ba
\end{array}
\qquad
\begin{array}{lcl}
B & \rightarrow & Ba \\
C & \rightarrow & Da \\
D & \rightarrow & Cb \\
D & \rightarrow & a
\end{array}
$$

4. $S' = S$.

Removal of rules of the kind $A \to B$

Rules of the kind $A \to B$ can be eliminated:

- for every $A \in V_N$, compute the set $N(A) = \{B \in V_N \mid A \Rightarrow_G^* B\}$
- add production rules
  $\{A \to w \mid w \notin V_N \text{ and } B \to w \in P \text{ and } B \in N(A)\}$.
- Remove $A \to B$

Example

$A \to a|B; \quad B \to bb|C; \quad C \to ccc$
is equivalent to
$A \to a|bb|ccc; B \to bb|ccc; C \to ccc$

Chomsky normal form

Chomsky normal form

A context free grammar G is in Chomsky normal form if all production rules are of the kind

- $A \to a$ with $a \in V_T$ or
- $A \to BC$ with $\{B, C\} \subseteq V_N$.

Theorem: Transformation into Chomsky normal form

Every context free grammar (that does not contain $S \to \varepsilon$) can be transformed into an equivalent grammar in Chomsky normal form.

Algorithm for computing Chomsky normal form

1. remove $A \to B$ rules
2. compute reduced grammar (remove non-terminating and unreachable symbols)
3. in all rules $A \to w$ with $w \notin V_T$, replace all occurrences of a with X_a for all $a \in V_T$
4. add rules $X_a \to a$
5. replace rules $A \to B_1 B_2 \ldots B_n$ for $n > 2$ with

$$\begin{array}{rcl} A & \to & B_1 C_1 \\ C_1 & \to & B_2 C_2 \\ & \vdots & \\ C_{n-2} & \to & B_{n-1} B_n \end{array}$$

Compute the Chomsky normal form of the following grammar:

$$G = (V_N, V_T, P, S)$$

1. $V_N = \{S, A, B, C\}$,
2. $V_T = \{\mathtt{a}, \mathtt{b}\}$,
3. P :

$$\begin{array}{lcl} S & \rightarrow & AB|SB|B \\ A & \rightarrow & Aa \\ B & \rightarrow & bB \end{array} \qquad \begin{array}{lcl} C & \rightarrow & SB \\ B & \rightarrow & BaB \\ B & \rightarrow & ab \end{array}$$

4. $S = S$.

Chomsky NF: purpose

Why transform G into Chomsky NF?

- in a context-free grammar, derivations can have arbitrary length $C \to B; B \to C$
- word problem is difficult to decide
- if G is in Chomsky NF, for a word of length n, a derivation has $2n - 1$ steps:
  - $n - 1$ rule applications $A \to BC$
  - n rule applications $A \to a$
- word problem can be decided by checking all derivations of length $2n - 1$
- That's still plenty of derivations!

More efficient algorithm: Cocke-Younger-Kasami (CYK)

Homework

- Consider the following DFA

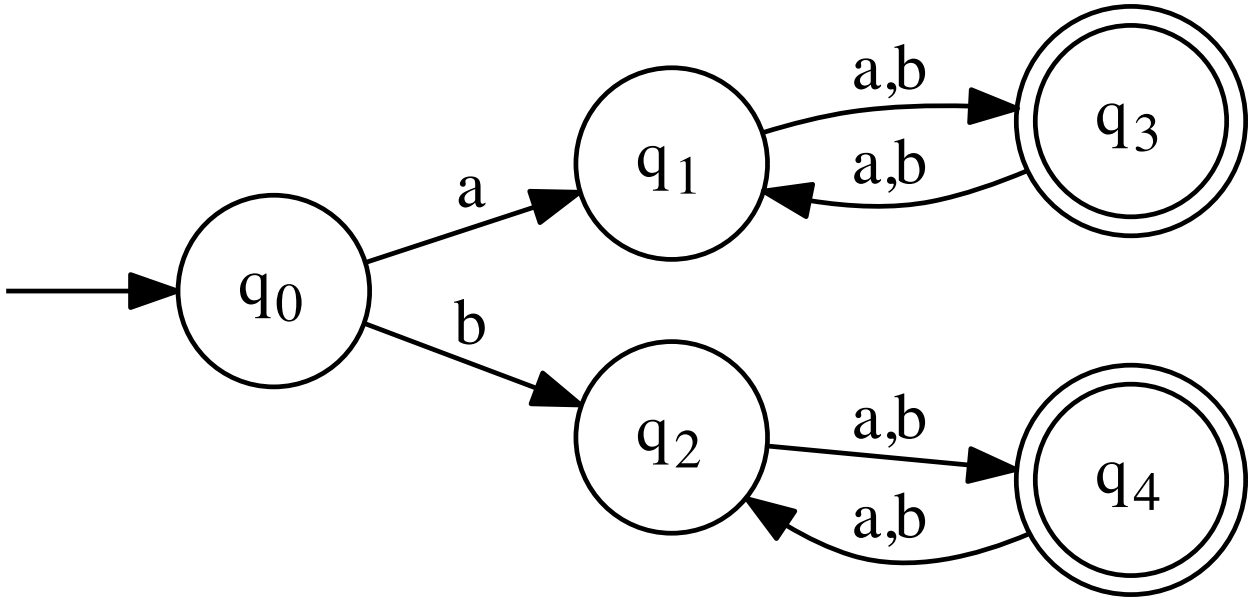

- Compute the corresponding regular grammar G
- Compute the reduced grammar G_r
- Convert G_r into Chomsky normal form

Review of Goals

- Refresher & Homework
- Formal Grammars
  - Definition
  - The Chomsky Hierarchy
  - Regular languages and right-linear grammars
  - Context-free grammars
    - Normal forms

Feedback round

- What was the best part of todays lecture?
- What part of todays lecture has the most potential for improvement?
  - Optional: how would you improve it?

Goals for Today

- Refresher
- Chomsky Normal Form (again)
- Cocke-Younger-Kasami (CYK) parsing
- Pushdown automata and context-free grammars

Refresher: Grammars

- Grammar: $G = \langle V_N, V_T, P, S \rangle$
  - $ulv \Rightarrow_G urv$ if $l \to r \in P$
  - $L(G) = \{w \in V_T^* | S \Rightarrow_G^* w\}$
- Chomsky-Hierarchy
  - Type 0: No restrictions
  - Type 1: $\alpha_1 A \alpha_2 \to \alpha_1 \beta \alpha_2$, $A \in V_N$, $\alpha_1, \alpha_2 \in V^*$, $\beta \in VV^*$
  - Type 2: $A \to VV^*$, $A \in V_N$
  - Type 3: $A \to aB$ or $A \to a$, $A, B \in V_N, a \in V_t$
  - Exception for types 1-3: $S \to \varepsilon$ is allowed if S does not occur in any right-hand-side
- L is type X, if there is a type X grammar G with $L(G) = L$
  - Every type 3 language is a type 2 language
  - Every type 2 language is a type 1 language
  - Every type 1 language is a type 0 language

Refresher: Type 3 grammars and regular languages

- Type 3 languages are exactly regular languages!
- Proof:
  - Generate NFA from grammar
  - Generate grammar from DFA
  - Idea:
    - The non-terminal (at most one) in a derived word corresponds to the state of the FA
    - The letter in the transistion corresponds to the terminal (at most one!) in a rule

Chomsky Normal Form

- $G = \langle V_N, V_T, P, S \rangle$ is in CNF, if for all $p \in P$:
  - p is of the form $A \to a$ with $A \in V_N, a \in V_T$ or
  - p is of the form $A \to BC$ with $A, B, C \in V_N$
- Algorithm:
  1. Remove $A \to B$
     - for every $A \in V_N$, compute the set $N(A) = \{B \in V_N \mid A \Rightarrow_G^* B\}$
     - add production rules
       $\{A \to w \mid w \notin V_N \text{ and } B \to w \in P \text{ and } B \in N(A)\}$.
     - Remove $A \to B$
  2. Find terminating symbols, remove non-terminating ones
  3. Find reachable symbols, remove non-reachable
  4. Add $X_a \to a$ if necessary, replace terminals in compound RHSs
  5. Expand $A \to B_1 B_2 \ldots B_n$ to $A \to B_1 C_1, C_1 \to B_2 \ldots B_n$, repeat until no RHS has more than 2 non-terminals

Compute the Chomsky normal form of the following grammar:

$$G = \langle V_N, V_T, P, S \rangle$$

1. $V_N = \{S, A, B, C\}$,
2. $V_T = \{\mathtt{a}, \mathtt{b}\}$,
3. P :

$$\begin{array}{lcl} S & \rightarrow & AB|SB|B \\ A & \rightarrow & Aa \\ B & \rightarrow & bB \end{array} \qquad \begin{array}{lcl} C & \rightarrow & SB \\ B & \rightarrow & BaB \\ B & \rightarrow & ab \end{array}$$

4. $S = S$.

CYK algorithm: idea

Decide the word problem for a context-free grammar G in Chomsky NF and a word w.

- find out which NTS are needed in the end to produce the TS for w (using production rules $A \to a$).
- iteratively find all NTS that can generate the required sequence of NTS (using production rules $A \to BC$).
- if S can produce the required sequence, $w \in L(G)$ holds.

Mechanism:

- operates on a table.
- field in row i and column j contains all NTS that can generate words from character i through j.

Example of dynamic programming!

CYK algorithm: example

$$
\begin{aligned}
S &\rightarrow a \\
B &\rightarrow b \\
B &\rightarrow c \\
S &\rightarrow SA \\
A &\rightarrow BS \\
B &\rightarrow BB \\
B &\rightarrow BS
\end{aligned}
$$

$i \setminus j$	1	2	3	4	5	6
1	S	$\emptyset$	S	$\emptyset$	$\emptyset$	S
2		B	A, B	B	B	A, B
3			S	$\emptyset$	$\emptyset$	S
4				B	B	A, B
5					B	A, B
6						S
$w =$	a	b	a	c	b	a

$w = abacba$

CYK: formal algorithm

for $i := 1$ to n **do**
  $N_{ii} := \{A \mid A \to a_i \in P\}$
for $d := 1$ to $n - 1$ **do**
  for $i := 1$ to $n - d$ **do**
    $j := i + d$
    $N_{ij} := \emptyset$
    for $k := i$ to $j - 1$ **do**
      $N_{ij} := N_{ij} \cup \{A \mid A \to BC \in P; B \in N_{ik}; C \in N_{(k+1)j}\}$

CYK algorithm: exercise CYKE

Consider the grammar $G = \langle V_N, V_T, P, S \rangle$ from the previous exercise CNF

- $V_N = \{S, A, B, C\} V_N = \{S, A, B, C_1, X_a, X_b\} V_N = \{S, A, B, D, X, Y\}$
- $V_T = \{\mathtt{a}, \mathtt{b}\}$

$$
P: \quad
\begin{array}{lcl}
S & \rightarrow & AB|SB|B \\
A & \rightarrow & Aa \\
B & \rightarrow & bB \\
C & \rightarrow & SB \\
B & \rightarrow & BaB \\
B & \rightarrow & ab
\end{array}
$$

Use the CYK algorithm to determine if the following words can be generated by G:

a) $w_1 = babaab$

b) $w_2 = abba$

$$
\begin{array}{lcl}
S & \rightarrow & SB|BC_1|X_bB|X_aX_b \\
B & \rightarrow & BC_1|X_bB|X_aX_b \\
C_1 & \rightarrow & X_aB \\
X_a & \rightarrow & a \\
X_b & \rightarrow & b
\end{array}
$$

Pushdown automata: motivation

- DFAs/NFAs are weaker than context-free grammars
- to accept languages like $a^n b^n$, an unlimited storage component is needed
- Pushdown automata have an unlimited stack
  - LIFO: last in, first out
  - only top symbol can be read
  - arbitrary amount of symbols can be added to the top

PDA: conceptual model

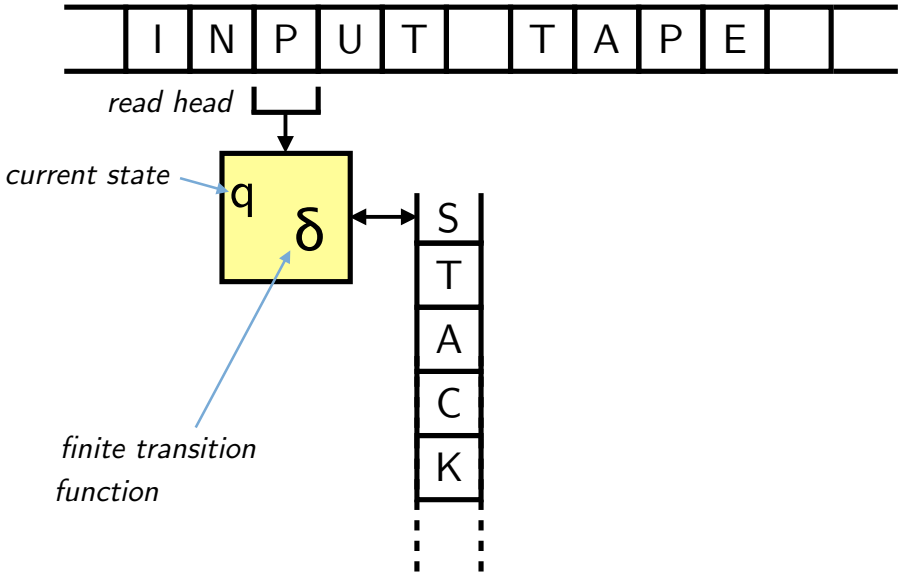

- Input is read left-to-right
- Stack is processed LIFO
- Transition is triggered by:
  - State
  - Current input symbol
  - Current top-of-stack
- Transition
  - can consume input character (ε transition are possible)
  - must consume top-of-stack
  - can write several characters onto stack
- Acceptance
  - PDA is in accepting state after processing word *w*

Pushdown automata: definition

Pushdown automaton

A pushdown automaton (PDA) is a 7-tuple $(Q, \Sigma, \Gamma, \delta, q_0, Z_0, F)$ where

- Q, Σ, q_0, F are defined as for NFAs.
- Γ is the stack alphabet
- Z_0 is the initial stack symbol
- $\delta \subseteq Q \times \Sigma \cup \{\varepsilon\} \times \Gamma \times \Gamma^* \times Q$ is the transition relation

Intuitively, a transition (p, a, R, STU, q) means:

- if the PDA is in state p,
- the next input character is a,
- and the top stack symbol is R,
- then write STU on top of the stack
- and switch to state q
- We can write this as $paR \to STUq$

PDAs: important properties

- PDAs defined above are non-deterministic
- deterministic PDAs are weaker
- ε transitions are possible

Configuration

A configuration is a tuple (q, w, γ) where

- q is the current state
- w is the input yet unread
- γ is the current stack content

A accepts a word w if after reading w, a is in a final state.

PDA: example (1)

The PDA $a = (Q, \Sigma, \Gamma, \delta, q_0, Z_0, F)$ accepts $a^n b^n$:

- $Q = \{q_0, q_1, q_f\}$;
- $\Sigma = \{a, b\}$;
- $\Gamma = \{Z, Z_0\}$;
- $F = \{q_f\}$;
- δ :

q_0	ε	Z_0	$\rightarrow$	ε	q_f	accept empty word
q_0	a	Z_0	$\rightarrow$	ZZ_0	q_0	read first a, store Z
q_0	a	Z	$\rightarrow$	ZZ	q_0	read further a, store Z
q_0	b	Z	$\rightarrow$	ε	q_1	read first b, delete Z
q_1	b	Z	$\rightarrow$	ε	q_1	read further b, delete Z
q_1	ε	Z_0	$\rightarrow$	ε	q_f	go to final state if input has been read and all Zs have been deleted

PDA: example (2)

q_0	ε	Z_0	$\rightarrow$	ε	q_f
q_0	a	Z_0	$\rightarrow$	ZZ_0	q_0
q_0	a	Z	$\rightarrow$	ZZ	q_0
q_0	b	Z	$\rightarrow$	ε	q_1
q_1	b	Z	$\rightarrow$	ε	q_1
q_1	ε	Z_0	$\rightarrow$	ε	q_f

- Process *aabb*:
  1. $(q_0, aabb, Z_0)$
  2. (q_0, abb, ZZ_0)
  3. (q_0, bb, ZZZ_0)
  4. (q_1, b, ZZ_0)
  5. (q_1, ε, Z_0)
  6. $(q_f, \varepsilon, \varepsilon)$
- Process *abb*
  1. (q_0, abb, Z_0)
  2. (q_0, bb, ZZ_0)
  3. (q_1, b, Z_0)
  4. No rule applicable

PDA: exercise PPAL

Define a PDA detecting all palindromes, i.e. all words $\{w \cdot \overleftarrow{w} \mid w \in \{a, b\}\}$ where $\overleftarrow{w} = a_n \dots a_1$ if $w = a_1 \dots a_n$.

Can you define a deterministic automaton?

Equivalency of PDAs and Context-Free Grammars

Theorem: The languages accepted by a PDA are exactly the languages produced by any context-free grammar!

- If L is context-free, there is a context-free grammar G with $L(G) = L$
- If L is context-free, there is a push-down automaton A with $L(A) = L$

Proof (idea):

- Generate G from A
- Generate A from G

From context-free grammars to PDAs

For a grammar $G = (V_N, V_T, P, S)$, an equivalent PDA $A = (\{q_0, q, q_f\}, \Sigma, \Sigma \cup V_N \cup \{Z_0\}, \delta, q_0, Z_0, \{q_f\})$ can be produced as follows:

$$\begin{aligned}
\delta \quad = \quad & \{(q_0, \varepsilon, Z_0, SZ_0, q)\} \quad \cup \\
& \{(q, \varepsilon, A, \gamma, q) \mid A \to \gamma \in P\} \quad \cup \\
& \{(q, a, a, \varepsilon, q) \mid a \in \Sigma\} \quad \cup \\
& \{(q, \varepsilon, Z_0, \varepsilon, q_f)\}
\end{aligned}$$

This PDA simulates the productions of G in the following way:

- start by pushing S onto the stack
- a production rule is applied to the top stack symbol if it is an NTS
- a TS is removed from the stack if it corresponds to the input
- if only Z_0 is on the stack and the entire input is read, accept.

From context-free grammars to PDAs: exercise EQPG

For the grammar $G = (\{S\}, \{a, b\}, P, S)$ with

$$
\begin{aligned}
P = \{S &\rightarrow aSa \\
S &\rightarrow bSb \\
S &\rightarrow aa \\
S &\rightarrow bb\}
\end{aligned}
$$

create an equivalent PDA A and show how A processes the input $abba$.

From PDAs to context-free grammars

Transforming a PDA $A = (Q, \Sigma, \Gamma, \delta, q_0, Z_0, F)$ into a grammar $G = (V_N, V_T, P, S)$ is more involved:

- V_N contains symbols $[pZq]$, meaning
  - A must go from p to q deleting Z from the stack
- for a transition $(p, a, Z, \varepsilon, q)$:
  - A can switch from p to q and delete Z by reading input a
  - this can be expressed by a production rule $[pZq] \to a$.
- for transitions (p, a, Z, ABC, q) that produce stack symbols:
  - test all possible transitions for removing these symbols
  - $[p, Z, t] \to a[qAr][rBs][sCt]$ for all states r, s, t
  - intuitive meaning: in order to go from p to t and delete Z, you can read the input a and go to q and then find states r, s through which you can go from q to t and delete A, B, and C from the stack.

Step 1: Accept with empty stack

Problem:

- NTSs represent stack symbols
- when there are not NTSs left, the word belongs to $L(G)$
- when the stack is empty before a final state is reached, the word does not belong to $L(A)$

Solution: transform A into a PDA
$A' = (Q \cup \{p_0, p_f\}, \Sigma, \Gamma \cup \{X_0\}, \delta', X_0, p_0, F \cup \{p_f\})$ where the stack is empty iff A reaches a final state.

- empty the stack if a final state is reached
  add transitions $(q_f, \varepsilon, \gamma, \varepsilon, p_f)$ for all $q_f \in F, \gamma \in \Gamma$
- add a new initial stack symbol that can only be deleted in p_f
  add transition $(p_0, \varepsilon, X_0, Z_0 X_0, q_0)$

Step 2: Convert transitions to production rules

Transform $A' = (Q \cup \{p_0, p_f\}, \Sigma, \Gamma \cup \{X_0\}, \delta', X_0, p_0, F \cup \{p_f\})$ into $G = (V_N, \Sigma, P, [p_0 X_0 p_f])$

- $V_N = \{[p, Z, q] \mid \{p, q\} \subseteq Q, Z \in \Gamma\}$
- for each transition $(p, a, Z, Y_1 Y_2 \ldots Y_n, q)$ with $a \in \Sigma \cup \{\varepsilon\}$ and $\{Z, Y_1, Y_2 \ldots Y_n\} \subseteq \Gamma$, P contains rules
  - $[p, Z, q_n] \to a[qY_1 q_1][q_1 Y_2 q_1] \ldots [q_{n-1} Y_n q_n]$
  - for all sets of states $\{q_1, q_2, \ldots q_n\} \subseteq Q$
- the start symbol $[p_0 X_0 p_f]$ means that the automaton has to go from the initial to the final state deleting the initial stack symbol

Step 3: Remove ε rules

Problem: a transition $(p, \varepsilon, Y, \varepsilon, q)$ leads to a rule $[pYq] \to \varepsilon$

Solution: replace ε rules with non-shortening rules

- iteratively find all symbols that can become ε
  - $E_0 = \{Y \in V_N \mid Y \to \varepsilon \in P\}$
  - $E_i = E_{i-1} \cup \{Y \in V_N \mid Y \to Y_1 \dots Y_n \text{ and } \{Y_1, \dots Y_n\} \subseteq E_{i-1}\}$
- for each rule with $Y \in E_{max}$ on the right side, add a corresponding rule without Y
  - e.g. for $A \to YaX$, add $A \to aX$
- delete $Y \to \varepsilon$ rules

Closure properties

Closure under $\cup, \cdot, ^*$

The class of context-free languages is closed under union, concatenation, and Kleene star.

For context-free grammars $G_1 = (V_{N_1}, V_T, P_1, S_1)$ and $G_2 = (V_{N_2}, V_T, P_2, S_2)$ with $V_{N_1} \cap V_{N_2} = \emptyset$ (rename NTSs if needed), let S be a new start symbol.

- for $L(G_1) \cup L(G_2)$, add productions $S \to S_1, S \to S_2$.
- for $L(G_1) \cdot L(G_2)$, add production $S \to S_1 S_2$.
- for $L(G_1)^*$, add productions $S \to \varepsilon, S \to T, T \to S_1 T, T \to S_1$.

Pumping lemma for context-free languages

- A pumping lemma similar to the one regular languages also holds for context-free languages.
- It can be used to show that a language is not context-free.
- Idea:
  - If a grammar produces words of arbitrary length, there must be a repeated NTS.
  - This NTS produces itself (and other symbols).
  - This cycle can be repeated arbitrarily often.
- Difference: instead of pumping one part of the word, two are pumped in parallel: $uv^hwx^hy \in L(G)$.
- Can not be applied to $\{a^nb^n\}$, but to $\{a^nb^nc^n\}$.
- $\{a^nb^nc^n\}$ is not context-free, but context-sensitive, as we have seen before.

Closure properties (cont.)

Closure under $\cap$

Context-free languages are not closed under intersection.

Otherwise, $\{a^n b^n c^n\}$ would be context-free:

- $\{a^n b^n c^m\}$ is context-free
- $\{a^m b^n c^n\}$ is context-free
- $\{a^n b^n c^n\} = \{a^n b^n c^m\} \cap \{a^m b^n c^n\}$

1. Define context-free grammars for $\{a^n b^n c^m \mid n, m \geq 0\}$ and $\{a^m b^n c^n \mid n, m \geq 0\}$
2. Use the known closure properties to show that context-free languages are not closed under complement.

Decision problems: word problem

The word problem for cf. languages

For a word w and a context-free grammar G, it is decidable whether $w \in L(G)$ holds.

The CYK algorithm decides the word problem.

Decision problems: emptiness problem

The emptiness problem for cf. languages

For a context-free grammar G, it is decidable if $L(G) = \emptyset$ holds.

- The pumping lemma gives us a maximum length: if a grammar produces any words, then it also produces one of maximum length n (depending on the properties of the grammar).
- Since there is only a finite number of words up to length n and the word problem is decidable, emptiness is also decidable.

Decision problems: equivalence problem

The equivalence problem for cf. languages

For context-free grammars G_1, G_2, it is undecidable if $L(G_1) = L(G_2)$ holds.

This follows from undecidability of Post's Correspondence Problem.

Homework

- Read through the open material on
  - Context-free grammars
  - Push-down automata
  - Closure properties of context-free languages
- Bonus: Understand the Pumming Lemma for CF languages (e.g. in Hoffmann)

Review of Goals

- Refresher
- Chomsky Normal Form (again)
- Cocke-Younger-Kasami (CYK) parsing
- Pushdown automata and context-free grammars

Feedback round

- What was the best part of todays lecture?
- What part of todays lecture has the most potential for improvement?
  - Optional: how would you improve it?

Goals for Today

- Refresher
- Practical Parsing with YACC/Bison
  - Background and Principles
  - Workflow
  - Desk calculator example
- Turing Machines
  - Basics
  - A working example
  - Skimming over some topics of computability

Refresher

- Chomsky Normal Form for context-free grammars
- Parsing with Cocke-Younger-Kasami (CYK)
- Pushdown-automata (PDA)
  - Unlimited stack
  - "Instructions": $qcZ \to Wq'$
  - Transitions consume top-symbol, can write back many symbols
  - Transistion can use and consume current letter of word
  - Non-determinism!
  - Success: PDA is in accepting state after consuming word
- PDAs are equivalent to context-free grammars
  - PDA can "execute" grammar
  - Grammar can "simulate" PDA (with some thinking)
- Context-free language properties:
  - Pumping possible with *uvwxy*-lemma
  - CF languages are closed under $\cup, \cdot, ^*$ (construct grammar)
  - CF languages are not closed under $\cap$ ($a^n b^n c^m \cap a^m b^n c^n$)
  - The word problem for CF-languages is decidable (CYK)
  - Emptiness is decidable, equivalency is not decidable

YACC/Bison

- Yacc - Yet Another Compiler Compiler
  - Originally written ≈1971 by Stephen C. Johnson at AT&T
  - LALR parser generator
  - Translates grammar into syntax analyser

- GNU Bison
  - Written by Robert Corbett in 1988
  - Yacc-compatibility by Richard Stallman
  - Output languages now C, C++, Java
- Yacc, Bison, BYacc, . . . mostly compatible (POSIX P1003.2)

Compiler

Source handler

Sequence of characters:
i,n,t, ␣, a,,, b, ;, a, =, b, +, 1, ;

Lexical analysis
(tokeniser)

Sequence of tokens:
(id, "int"), (id, "a"), (id, "b"), (semicolon), (id, "a"), (eq), (id, "b"), (plus), (int, "1"), (semicolon)

Syntactic analysis
(parser)

e.g. Abstract syntax tree

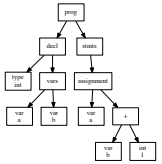

Semantic analysis

e.g. AST+symbol table

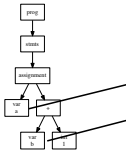

Variable	Type
a	int
b	int

Code generation
(several optimisation passes)

e.g. assembler code

```
ld a,b
ld c, 1
add c
...
```

Flex

(seve

Yacc/Bison Background

- By default, Bison constructs a 1 token Look-Ahead Left-to-right Rightmost-derivation or LALR(1) parser
  - Input tokens are processed left-to-right
  - Shift-reduce parser:
    - Stack holds tokens (terminals) and non-terminals
    - Tokens are shifted from input to stack. If the top of the stack contains symbols that represent the right hand side (RHS) of a grammar rule, the content is reduced to the LHS
    - Since input is reduced left-to-right, this corresponds to a rightmost derivation
    - Ambiguities are solved via look-ahead and special rules
    - If input can be reduced to start symbol, success!
    - Error otherwise
- LALR(1) is efficient in time and memory
  - Can parse “all reasonable languages”
  - For unreasonable languages, Bison (but not Yacc) can also construct GLR (General LR) parsers
    - Try all possibilities with back-tracking
    - Corresponds to the *non-determinism* of stack machines

Yacc/Bison Overview

- Bison reads a specification file and converts it into (C) code of a parser
- Specification file: Definitions, grammar rules with actions, support code
  - Definitions: Token names, associated values, includes, declarations
  - Grammar rules: Non-terminal with alternatives, action associated with each alternative
  - Support code: e.g. `main()` function, error handling...
  - Syntax similar to (F)lex
    - Sections separated by `%%`
    - Special commands start with `%`
- Bison generates function `yyparse()`
- Bison needs function `yylex()`
  - Usually provided via (F)lex

Yacc/Bison workflow

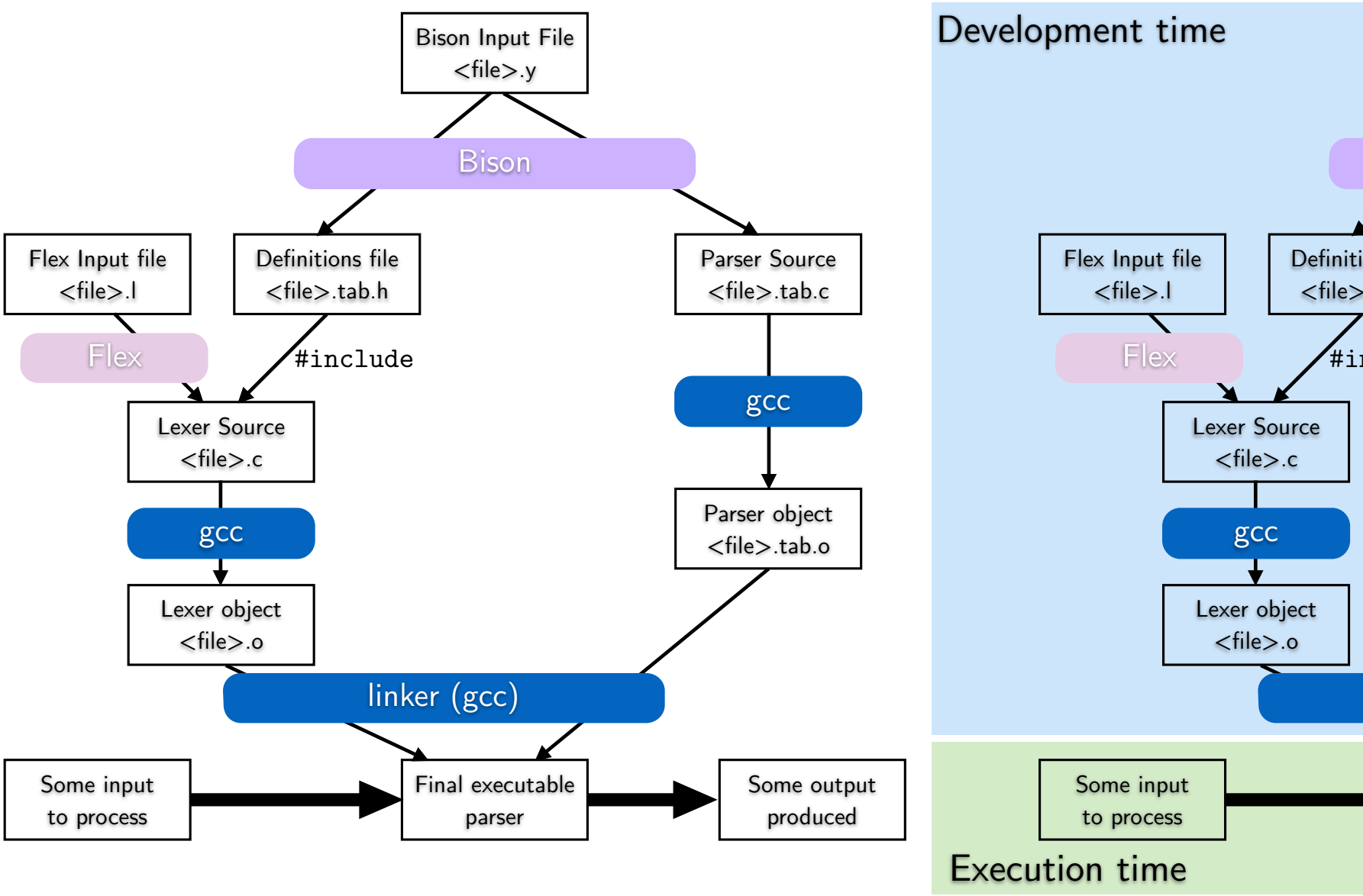

Example task: Desk calculator

- Desk calculator
  - Reads algebraic expressions and assignments
  - Prints result of expressions
  - Can store values in registers `R0-R99`
- Example session:

```
[Shell] ./scicalc
R10=3*(5+4)
> RegVal: 27.000000
(3.1415*R10+3)
> 87.820500
R9=(3.1415*R10+3)
> RegVal: 87.820500
R9+R10
> 114.820500
...
```

Abstract grammar for desk calculator (partial)

$G_{DC} = \langle V_N, V_T, P, S \rangle$

- $V_T = \{$`PLUS`, `MULT`, `ASSIGN`, `OPENPAR`, `CLOSEPAR`, `REGISTER`, `FLOAT`, ...$\}$
  - Some terminals are single characters (+, =, ...)
  - Others are complex: `R10`, `1.3e7`
  - Terminals ("tokens") are generated by the lexer
- $V_N = \{$`stmt`, `assign`, `expr`, `term`, `factor`, ...$\}$
- P :

```
stmt     →  assign
         |  expr
assign   →  REGISTER ASSIGN expr
expr     →  expr PLUS term
         |  term
term     →  term MULT factor
         |  factor
factor   →  REGISTER
         |  FLOAT
         |  OPENPAR expr CLOSEPAR
```

- $S =$ *handwave*
  - For a single statement, $S =$ `stmt`
  - In practice, we need to handle sequences of statements and empty input lines (not reflected in the grammar)

Parsing statements (1)

- Example string: R10 = (4.5+3*7)
- Tokenized: `REGISTER ASSIGN OPENPAR FLOAT PLUS FLOAT MULT FLOAT CLOSEPAR`
  - In the following abbreviated R, A, O, F, P, F, M, F, C
- Parsing state:
  - Unread input (left column)
  - Current stack (middle column)
  - How state was reached (right column)
- Parsing:

Input	Stack	Comment
R A O F P F M F C		Start
A O F P F M F C	R	Shift R to stack
O F P F M F C	R A	Shift A to stack
F P F M F C	R A O	Shift O to stack
P F M F C	R A O F	Shift F to stack
P F M F C	R A O factor	Reduce F
P F M F C	R A O term	Reduce `factor`

...

Parsing statements (2)

R A O F P F M F C		Start
A O F P F M F C	R	Shift R to stack
O F P F M F C	R A	Shift A to stack
F P F M F C	R A O	Shift O to stack
P F M F C	R A O F	Shift F to stack
P F M F C	R A O factor	Reduce F
P F M F C	R A O term	Reduce factor
P F M F C	R A O expr	LA! Reduce term
F M F C	R A O expr P	Shift P
M F C	R A O expr P F	Shift F
M F C	R A O expr P factor	Reduce F
M F C	R A O expr P term	Reduce factor
F C	R A O expr P term M	LA! Shift M
C	R A O expr P term M F	Shift F
C	R A O expr P term M factor	Reduce F
C	R A O expr P term	Reduce tMf
C	R A O expr	Reduce ePt
	R A O expr C	Shift C
	R A factor	Reduce OeC
	R A term	Reduce factor
	R A expr	Reduce term
	stmt	Reduce RAe

Lexer interface

- Bison parser requires `yylex()` function
- `yylex()` returns token
  - Token text is defined by regular expression pattern
  - Tokens are encoded as integers
  - Symbolic names for tokens are defined by Bison in generated header file
    - By convention: Token names are all `CAPITALS`
- `yylex()` provides optional semantic value of token
  - Stored in global variable `yylval`
  - Type of `yylval` defined by Bison in generated header file
    - Default is `int`
    - For more complex situations often a `union`
    - For our example: Union of double (for floating point values) and integer (for register numbers)

Lexer for desk calculator (1)

```
/*
     Lexer for a minimal "scientific" calculator.

     Copyright 2014 by Stephan Schulz, schulz@eprover.org.

     This code is released under the GNU General Public Lic
     Version 2.
 */

%option noyywrap

%{
   #include "scicalcparse.tab.h"
%}
```

Lexer for desk calculator (2)

```
DIGIT       [0-9]
INT         {DIGIT}+
PLAINFLOAT {INT}|{INT}[.]|{INT}[.]{INT}|[.]{INT}
EXP         [eE](\+|-)?{INT}
NUMBER      {PLAINFLOAT}{EXP}?
REG         R{DIGIT}{DIGIT}?

%%

"*" {return MULT;}
"+" {return PLUS;}
"=" {return ASSIGN;}
"(" {return OPENPAR;}
")" {return CLOSEPAR;}
\n  {return NEWLINE;}
```

Lexer for desk calculator (3)

```
{REG}     {
            yylval.regno = atoi(yytext+1);
            return REGISTER;
          }

{NUMBER} {
            yylval.val = atof(yytext);
            return FLOAT;
         }

[ ] { /* Skip  whitespace*/ }

 /* Everything else is an invalid character. */
.     { return ERROR;}

%%
```

Data model of desk calculator

- Desk calculator has simple state
  - 100 floating point registers
  - `R0-R99`
- Represented in C as array of doubles:

```
#define MAXREGS 100

double regfile[MAXREGS];
```

- Needs to be initialized in support code!

Bison code for desk calculator: Header

```
%{
   #include <stdio.h>

   #define MAXREGS 100

   double regfile[MAXREGS];

   extern int yyerror(char* err);
   extern int yylex(void);
%}

%union {
   double val;
   int    regno;
}
```

Bison code for desk calculator: Tokens

```
%start stmtseq

%left  PLUS
%left  MULT
%token ASSIGN
%token OPENPAR
%token CLOSEPAR
%token NEWLINE
%token REGISTER
%token FLOAT
%token ERROR

%%
```

Actions in Bison

- Bison is based on syntax rules with associated actions
  - Whenever a reduce is performed, the action associated with the rule is executed
- Actions can be arbitrary C code
- Frequent: semantic actions
  - The action sets a semantic value based on the semantic value of the symbols reduced by the rule
  - For terminal symbols: Semantic value is `yylval` from Flex
  - Semantic actions have “historically valuable” syntax
    - Value of reduced symbol: `$$`
    - Value of first symbol in syntax rule body: `$1`
    - Value of second symbol in syntax rule body: `$2`
    - ...
    - Access to named components: `$<val>1`

Bison code for desk calculator: Grammar (1)

```
stmtseq: /* Empty */
    | NEWLINE stmtseq       {}
    | stmt  NEWLINE stmtseq {}
    | error NEWLINE stmtseq {};  /* After an error,
                                    start afresh */
```

- Head: sequence of statements
- First body line: Skip empty lines
- Second body line: separate current statement from rest
- Third body line: After parse error, start again with new line

Bison code for desk calculator: Grammar (2)

```
stmt: assign  {printf("> RegVal: %f\n", $<val>1);}
     |expr    {printf("> %f\n", $<val>1);};

assign: REGISTER ASSIGN expr {regfile[$<regno>1] = $<val>3;
                              $<val>$ = $<val>3;} ;

expr: expr PLUS term {$<val>$ = $<val>1 + $<val>3;}
    | term {$<val>$ =  $<val>1;};

term: term MULT factor {$<val>$ = $<val>1 * $<val>3;}
    | factor {$<val>$ =  $<val>1;};

factor: REGISTER {$<val>$ = regfile[$<regno>1];}
      | FLOAT  {$<val>$ =  $<val>1;}
      | OPENPAR expr CLOSEPAR {$<val>$ =  $<val>2;};
```

Bison code for desk calculator: Support code

```
int yyerror(char* err)
{
   printf("Error: %s\n", err);
   return 0;
}

int main (int argc, char* argv[])
{
  int i;

  for(i=0; i<MAXREGS; i++)
  {
     regfile[i] = 0.0;
  }
  return yyparse();
}
```

Reminder: Workflow and dependencies

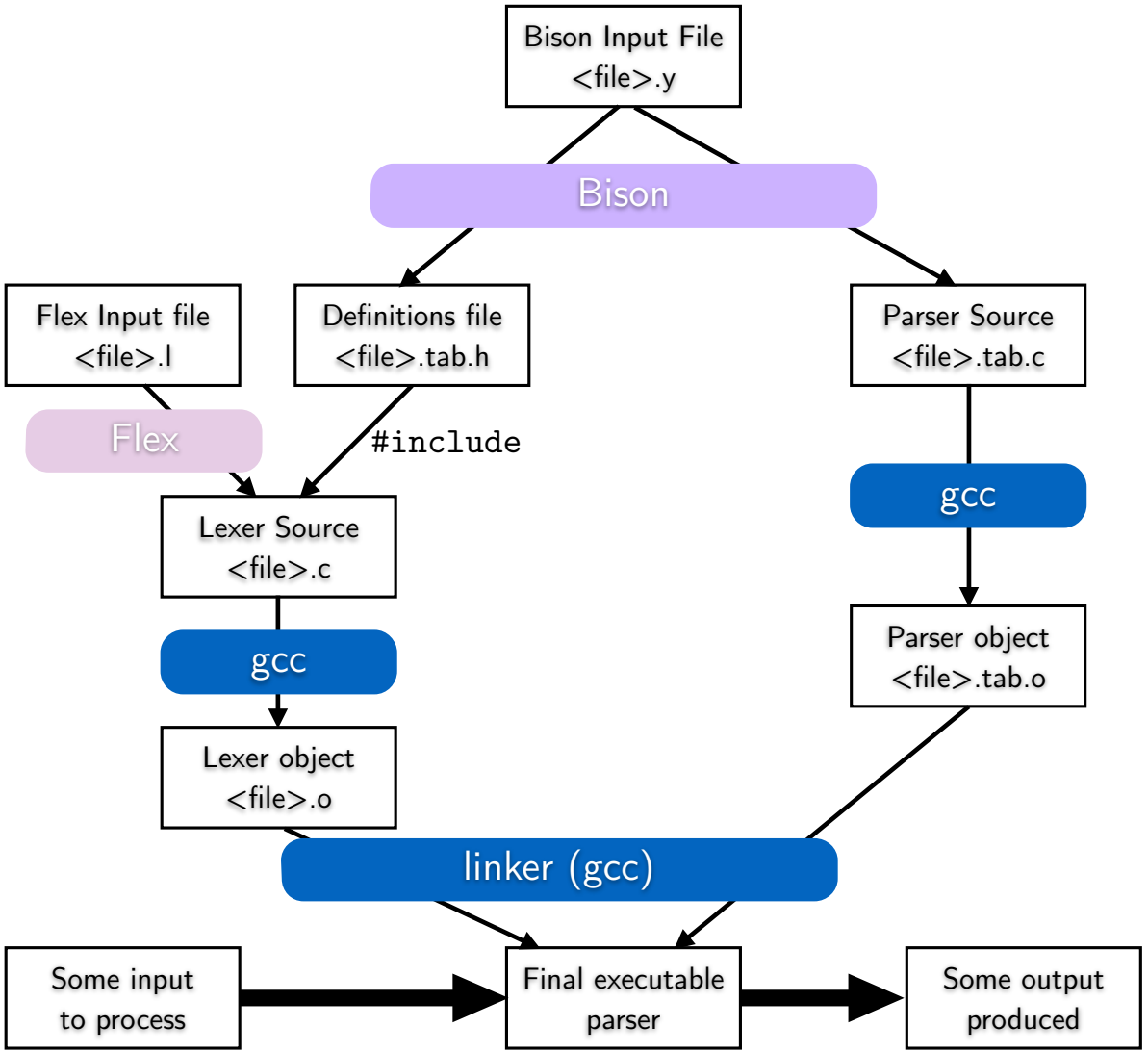

Building the calculator

1. Generate parser C code and include file for lexer
   - `bison -d scicalcparse.y`
   - Generates `scicalcparse.tab.c` and `scicalcparse.tab.h`
2. Generate lexer C code
   - `flex -t scicalclex.l > scicalclex.c`
3. Compile lexer
   - `gcc -c -o scicalclex.o scicalclex.c`
4. Compile parser and support code
   - `gcc -c -o scicalcparse.tab.o scicalcparse.tab.c`
5. Link everything
   - `gcc scicalclex.o scicalcparse.tab.o -o scicalc`
6. Fun!
   - `./scicalc`

Bison exercise

- Go to `http://wwwlehre.dhbw-stuttgart.de/~sschulz/fla2014.html`
- Download `scicalcparse.y` and `scicalclex.l`
- Build the calculator
- Run and test the calculator
- Add a command `clear` that clears (sets to 0) all registers, rebuild, retest!

Homework

- Extend the desk calculator example as follows:
  - Add support for division and subtraction `/`, `-`
  - Add support for unary minus (the negation operator), using ˜ as the negation sign
    - Bonus exercise: Use plain `-` as both unary and binary operators!
  - Add support for the trigonometric function `sin(x)`, `cos(x)`, where x can be any valid expression
  - Add support for `log(b,x)`, computing $\log_b(x)$
- Hints:
  - You may need to `#include<math.h>` and link with `-lm`
  - $\log_b(x) = \frac{\log_{10}(x)}{\log_{10}(b)}$. `man log10` should be helpful

Turing machine: Motivation

Four classes of languages described by grammars and equivalent machine models:

1. regular languages $\rightsquigarrow$ finite automata
2. context-free languages $\rightsquigarrow$ pushdown automata
3. context-sensitive languages $\rightsquigarrow$?
4. Type-0-languages $\rightsquigarrow$?

We need a machine model that is more powerful than PDAs: Turing machines

Turing machine (0)

- Proposed in 1936 by Alan Turing
  - Model of a universal computer
  - Paper: *On computable numbers, with an application to the Entscheidungsproblem*

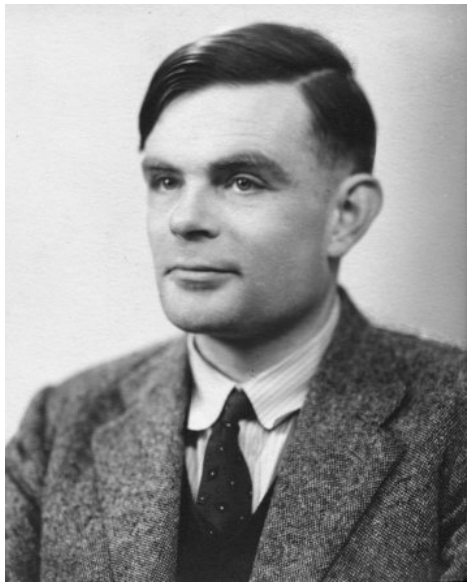

- Properties:
  - Storage: unlimited tape (in both directions)
  - Read/write head can move arbitrarily on unlimited storage
  - Finite control unit (FA)
  - No separation between input medium (holds Σ) and working medium (Γ)
  - Transition relation only reads one character from the tape, but contains moving instructions (l, n, r)

Turing machine (1)

$$\mathcal{M} = (Q, \Sigma, \Gamma, \Delta, q_0, F)$$

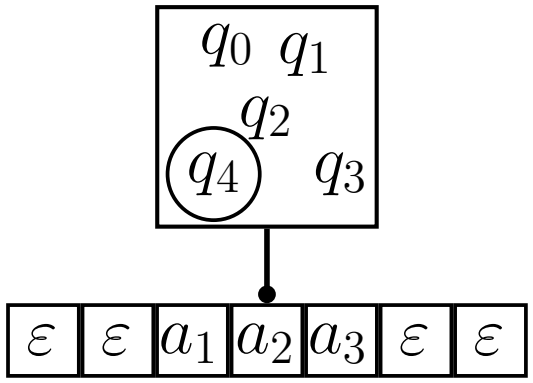

Q	$=$	$\{q_0, q_1, q_2, \ldots, q_n\}$	states
Σ	$=$	$\{a_0, a_1, a_2, \ldots, a_m\}$	I/O alphabet
Γ	$\supseteq$	$\Sigma \cup \{\varepsilon\}$	tape alphabet
q_0	$\in$	Q	initial state
F	$\subseteq$	Q	final states
Δ	$\subseteq$	$Q \times \Gamma \times \Gamma \times \{l, n, r\} \times Q$	transition relation

Turing machines are often deterministic:

$$\Delta : (Q \times \Gamma) \to (\Gamma \times \{l, n, r\} \times Q)$$

The Turing machine (2)

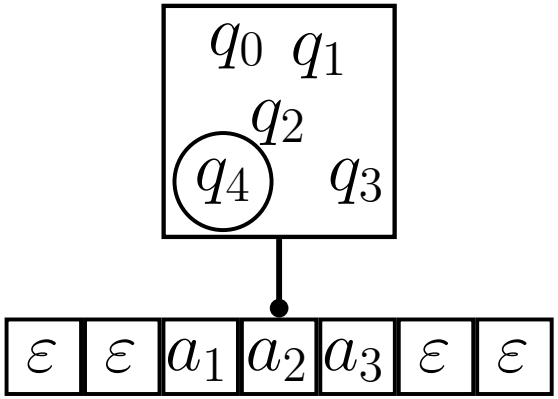

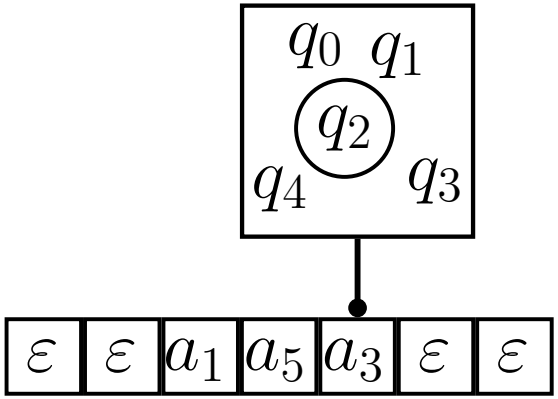

$(q_4, a_2, a_5, r, q_2) \in \Delta$

Also written as $q_4, a_2 \rightarrow a_5, r, q_2$

Configurations of TMs

A configuration c of a Turing machine is given by

- the current state q
- the tape content α on the left of the read/write head (except unlimited ε sequences)
- the tape content β starting with the position of the write head (except unlimited ε sequences)
- written as $\alpha q \beta$, e.g. $a_1 a_5 q_2 a_3$

Computations of TMs

The computation of a TM $\mathcal{M}$ on a word w is a sequence of configurations (according to the transition function) of configurations, starting from $q_0 w$.

- $c = \alpha q \beta$ is accepting if $q \in F$.
- c is a stop configuration if there are no transitions from c.
- A Turing machine accepts w if the computation of T on w results in accepting stop configuration.

Exercise: Turing machines

- Consider $\Sigma = \{a, b\}$ and $L = \{w \in \Sigma^* \mid |w|_a \text{ is even}\}$
  - Give a TM M that accepts (only) words from L
  - Give the computation of M on the words *abbab* and *bbab*

Example: TM for $a^n b^n c^n$

$M = \langle Q, \Sigma, \Gamma, \Delta, q_0, F \rangle$ with

- $Q = \{$start, findb, findc, check, back, end, f $\}$
- $\Sigma = \{a, b, c\}$ and $\Gamma = \Sigma \cup \{\varepsilon, x, y, z\}$
- Δ per tables below
- $q_0 =$start and $F = \{f\}$

state	read	write	move	state
start	ε	ε	n	f
start	a	x	r	findb
findb	a	a	r	findb
findb	y	y	r	findb
findb	b	y	r	findc
findc	b	b	r	findc
findc	z	z	r	findc
findc	c	z	r	check
check	c	c	l	back
check	ε	ε	l	end

state	read	write	move	state
back	z	z	l	back
back	b	b	l	back
back	y	y	l	back
back	a	a	l	back
back	x	x	r	start
end	z	z	l	end
end	y	y	l	end
end	x	x	l	end
end	ε	ε	n	f

Exercise: Turing machines (2) TMABC

a) Simulate the computations of M on $aabbcc$ and $aabc$.

b) Develop a Turing machine accepting all words $\{wcw \mid w \in \{a, b\}^*\}$.

c) How do you have to modify the TM from b) if you want to recognise inputs of the form ww?

Turing machines with several tapes

- A k-tape TM has k tapes on which the heads can move independently.
- $\delta \subseteq Q \times \Gamma^k \times \Gamma^k \times \{r, l, n\}^k \times Q$
- It is possible to simulate a k-tape TM with a (1-tape) TM:
  - use alphabet $\Gamma^k \times \{X, \varepsilon\}^k$
  - the first k language elements encode the tape content, the remaining ones the positions of the heads.

Nondeterminism

- just like FA and PDA, TMs can be deterministic or non-deterministic, depending on the transition relation.
- for non-deterministic TMs, the machine accepts w if there exists a sequence of transitions leading to an accepting stop configuration.

Deterministic TMs can simulate computations of non-deterministic TMs, i.e. they describe the same class of languages:

- use a 3-tape TM:
- tape 1 stores the input w
- tape 2 records which non-deterministic choices are made (for all non-deterministic transitions)
- tape 3 encodes the computation on w with choices stored on tape 2.

Simulating a Type-0-grammar *G* with a TM

- use a non-deterministic 2-tape TM
- tape 1 stores input word *w*
- tape 2 simulates the derivations of *G*, starting with *S*
  - (non-deterministically) choose a position
  - if the word starting at the position, matches α of a rule $\alpha \to \beta$, apply the rule
    - move tape content if necessary
    - replace α with β
  - compare content of tape 2 with tape 1
    - if they are equal, accept
    - otherwise continue

Simulating a TM with a Type-0-grammar

Goal: transform TM $\mathcal{A} = (Q, \Sigma, \Gamma, \Delta, q_0, F)$ into grammar G
Technical difficulty:

- $\mathcal{A}$ receives word as input at the start, possibly modifies it, then possibly accepts.
- G starts with S, applies rules, possibly generating w at the end.

1. generate input word $w \in \Sigma^*$ with blanks left and right
2. simulate the computation of $\mathcal{A}$ on w

$$
\begin{aligned}
(p, a, b, r, q) &\rightsquigarrow pa \to bq \\
(p, a, b, l, q) &\rightsquigarrow cpa \to qcb \ (\forall c \in \Gamma) \\
(p, a, b, n, q) &\rightsquigarrow pa \to qb
\end{aligned}
$$

3. recreate w
   - requires a more complicated alphabet

Closure properties

The class of languages described by Type-0-grammars or Turing machines is:

- closed under $\cup, \cdot, ^*$
  - more complicated than for cf. grammars because context can influence rule applicability
  - rename NTSs (as for cf. grammars)
  - only allow NTSs as context
  - only productions of the kind $N_1 N_2 \ldots N_k \to M_1 M_2 \ldots M_j$ or $N \to a$
- closed under $\cap$
  - use a 2-tape-TM
  - simulate computation of $\mathcal{A}_1$ on tape 1, $\mathcal{A}_2$ on tape 2
  - accept if both $\mathcal{A}_1$ and $\mathcal{A}_2$ accept
- not closed under complement

Linear bounded automata and context-sensitive grammars

- context-sensitive grammars do not allow for shortening rules
- a linear bounded automaton (LBA) is a TM that only uses the space originally occupied by the input w.
- ends of w are indicated by markers that cannot be passed

...	$>$	i	n	p	u	t	$<$	...

Equivalence of cs. grammars and LBAs

Transformation of cs. grammar G into LBA:

- as for Type-0-grammar: use 2-tape-TM
  - input on tape 1
  - simulate operations of G on tape 2
- since the productions of G are non-shortening, words longer than w need not be considered

Transformation of LBA $\mathcal{A}$ into cs. grammar:

- similar to construction for TM:
  - generate w without blanks
  - simulate operation of $\mathcal{A}$ on w
    - rules are not shortening ✓
    - $PA \to BQ$ is not cs. . . .
    - . . . but $PA \to XA \to XY \to BY \to BQ$ is cs. (and equivalent) ✓

Context-sensitive grammars: closure properties

The class of languages described by context-sensitive grammars / LBAs is:

- closed under $\cup, \cdot, ^*, \cap$
  - as for Type-0-grammars / TMs
- closed under complement
  - shown in 1988
  - many scientists believed opposite to be true

Context-sensitive grammars: decision problems

Word problem for cs. languages

The word problem for cs. languages is decidable.

- Γ, Σ and P are finite
- rules are not shortening
- for a word of length n only a finite number of derivations up to length n has to be considered.

Emptiness problem for cs. languages

The emptiness problem for cs. languages is undecidable.

Also follows from undecidability of Post's correspondence problem.

Equivalence problem for cs. languages

The equivalence problem for cs. languages is undecidable.

If this problem was decidable for cs. languages, ist would also be decidable for cf. languages (since every cf. language is also cs.).

The universal Turing machine $\mathcal{U}$

$\mathcal{U}$ is a Turing machine emulator

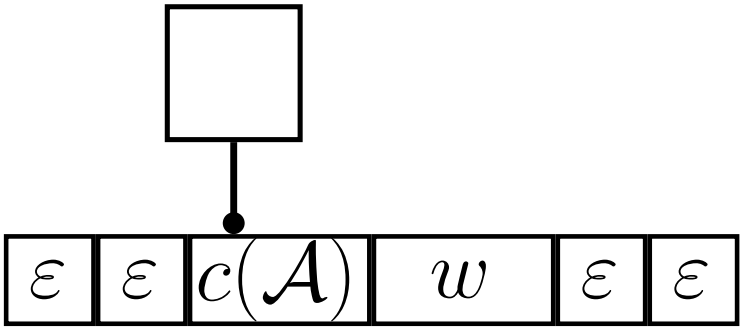

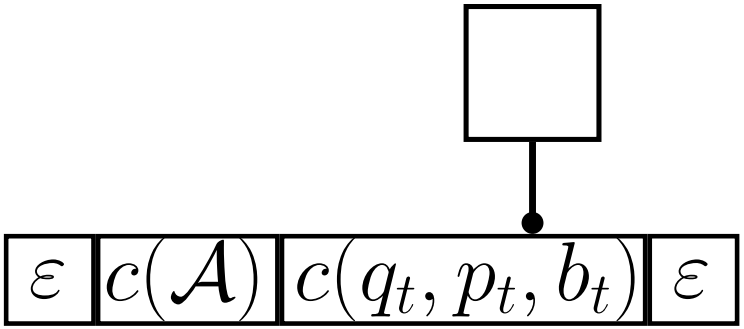

Input:

- encoding $c(\mathcal{A})$ of a TM $\mathcal{A}$
- word w

emulates computation of $\mathcal{A}$ on w

- encodes current configuration of $\mathcal{A}$
- stops if $\mathcal{A}$ stops
- accepts if $\mathcal{A}$ accepts w
- runs forever if $\mathcal{A}$ runs forever with input w

Every solvable problem can be solved in software.

The halting problem

Does the TM $\mathcal{A}$ halt with input w?

Wanted: TMs $\mathcal{H}1$ and $\mathcal{H}2$, such that with input $c(\mathcal{A})$ and w

1. $\mathcal{H}1$ accepts iff $\mathcal{A}$ halts on w and
2. $\mathcal{H}2$ accepts iff $\mathcal{A}$ does not halt on w.

decision procedure for HP: let $\mathcal{H}1$ and $\mathcal{H}2$ run in parallel

1. $\mathcal{U}$ (almost) does what $\mathcal{H}1$ needs to do. ✓
2. Difficult: $\mathcal{H}2$ needs to detect that that $\mathcal{A}$ does not terminate. ?
   - infinite tape $\rightsquigarrow$ infinite number possible configurations
   - recognising repeated configurations not sufficient.

Undecidability of the halting problem

Assumption: there is a TM $\mathcal{H}2$ which, given $c(\mathcal{A})$ and w as input

1. accepts if $\mathcal{A}$ does not halt with input w and
2. runs forever if $\mathcal{A}$ halts with input w.

If $\mathcal{H}2$ exists, then there is also a TM $\mathcal{S}$ accepting exactly those encodings of TMs that do not accept their own encoding

1. input: TM encoding $c(\mathcal{A})$
2. $\mathcal{S}$ replaces $c(\mathcal{A})$ with $c(\mathcal{A})c(\mathcal{A})$
3. afterwards $\mathcal{S}$ operates like $\mathcal{H}2$

Computation of $\mathcal{S}$ with input $c(\mathcal{S})$

Reminder

$\mathcal{S}$ accepts $c(\mathcal{A})$ iff $\mathcal{A}$ does not accept $c(\mathcal{A})$.

Case 1 $\mathcal{S}$ accepts $c(\mathcal{S})$. This implies that $\mathcal{S}$ does not halt on the input $c(\mathcal{S})$. Therefore $\mathcal{S}$ does not accept $c(\mathcal{S})$. $\lightning$

Case 2 $\mathcal{S}$ rejects $c(\mathcal{S})$. Since $\mathcal{S}$ accepts exactly the encodings of those TMs that reject their own encoding, this implies that $\mathcal{S}$ accepts the input $c(\mathcal{S})$. $\lightning$

This implies:

1. There is no such TM $\mathcal{S}$.
2. There is no TM $\mathcal{H}2$.
3. The halting problem is undecidable. (Turing 1936)

Decision problems

Decision problems for Turing machines

The word problem, the emptiness problem, and the equivalence problem are undecidable.

If any of these problems were decidable, one could easily derive a decision procedure for the halting problem.

Closure under complement

The class of languages accepted by Turing machines is not closed under complement.

If it were closed under complement, $\mathcal{H}2$ would exist.

Diagonalisation

Challenge of the proof

Show for all possible (infinitely many) TMs that none of them can decide the halting problem.

TM \ input	$c(\mathcal{A})$	$c(\mathcal{B})$	$c(\mathcal{C})$	$c(\mathcal{D})$	$c(\mathcal{E})$	...
$\mathcal{A}$	✗					
$\mathcal{B}$		✗				
$\mathcal{C}$			✗			
$\mathcal{D}$				✗		
$\mathcal{E}$					✗	
$\vdots$						$\ddots$

Further diagonalisation arguments

Cantor diagonalisation (1891)

The set of real numbers is uncountable.

Epimenides paradox (6th century BC)

Epimenides [the Cretan] says: “[All] Cretans are always liars.”

Russell’s paradox (1903)

$R := \{T \mid T \notin T\}$ Does $R \in R$? hold?

Gödel’s incompleteness theorem (1931)

Construction of a sentence in 2nd order predicate logic which states that itself cannot be proved.

Is this important?

- What is so bad about not being able to decide if a TM halts?
- Isn't this a purely academic problem?

Ludwig Wittgenstein (1939)

It is very queer that this should have puzzled anyone. [...] If a man says "I am lying" we say that it follows that he is not lying, from which it follows that he is lying and so on. Well, so what? You ca go on like that until you are black in the face. Why not? It doesn't matter.

(Lectures on the Foundations of Mathematics, Cambridge)

What is the impact on practice?

It does not only affect halting

Halting is a fundamental property.
If halting cannot be decided, what can?

Rice's theorem (1953)

Every non-trivial semantic property of TMs is undecidable.

non-trivial satisfied by some TMs, not satisfied by others
semantic referring to the accepted language

Example (Property E: TM accepts the set of prime numbers P)

If E is decidable, then so is the halting problem for $\mathcal{A}$ and an input $w_{\mathcal{A}}$.
Approach: Turing machine $\mathcal{E}$, input $w_{\mathcal{E}}$

1. simulate computation of $\mathcal{A}$ auf $w_{\mathcal{A}}$
2. decide if $w_{\mathcal{E}} \in P$

Check if $\mathcal{E}$ accepts the set of prime numbers:
yes $\rightsquigarrow$ $\mathcal{A}$ halts with input $w_{\mathcal{A}}$ no $\rightsquigarrow$ $\mathcal{A}$ does not halt on input $w_{\mathcal{A}}$

It does not only affect Turing machines

Church-Turing-thesis

Every effectively calculable function is a computable function.

computable	means calculable by a (Turing) machine
effectively calculable	refers to the intuitive idea without reference to a particular computing model

What holds for Turing machines also holds for

- Type-0 grammars,
- *while* programs,
- von Neumann architecture,
- Java/C++/Lisp/Prolog programs,
- future machines and languages

No interesting property for any powerful programming language is decidable!

Undecidable problems in practice

software development	Does the program match the specification?
debugging	Does the program have a memory leak?
malware	Does the program harm the system?
education	Does the student's TM compute the same function as the teacher's TM?
formal languages	Do two cf. grammars generate the same language?
mathematics	Hilbert's tenth problem: find integer solutions for a polynomial with several variables
logic	Satisfiability of formulas in first-order predicate logic

Yes, it does matter!

Many people with programming experience do not know this. . .

Some things that are still possible

It is possible	because
to translate a program P from a language into an equivalent one in another language	one specific program is created for P.
to detect if a program contains a instruction to write to the hard disk	this is a syntactic property. Deciding if this instruction is eventually executed is impossible in general.
to check at runtime if a program accesses the hard disk	this corresponds to the simulation by $\mathcal{U}$. It is undecidable if the code is never executed.
to write a program that gives the correct answer in many "interesting" cases	there will always be cases in which an incorrect answer or none at all is given.

What can be done?

Can the Turing machine be “fixed”?

- undecidability proof does not use any specific TM properties
- only requirement: existence of universal machine $\mathcal{U}$
- TM is not to weak, but too powerful
- different machine models have the same problem (or are weaker)

Alternatives

- If possible: use weaker formalisms (modal logic, dynamic logic)
- use heuristics that work well in many cases, solve remaining ones manually
- interactive programs

Turing machines: summary

- Halting problem: does TM $\mathcal{A}$ halt on input w?
- Turing: no TM can decide the halting problem.
- Rice: no TM can decide any non-trivial semantic property of TMs.
- Church-Turing: this holds for every powerful machine model.
- *No interesting problem of programs in any powerful programming language is decidable.*

Consequences

☹ Computers cannot take all work away from computer scientists.

☺ Computers will never make computer scientists redundant.

Property overview

property	regular (Type 3)	context-free (Type 2)	context-sens. (Type 1)	unrestricted (Type 0)
closure				
$\cup, \cdot, ^*$	✓	✓	✓	✓
$\cap$	✓	✗	✓	✓
$\overline{}$	✓	✗	✓	✗
decidability				
word	✓	✓	✓	✗
emptiness	✓	✓	✗	✗
equiv.	✓	✗	✗	✗
deterministic equivalent to non-det.	✓	✗	?	✓

Review of Goals

- Refresher
- Practical Parsing with YACC/Bison
  - Background and Principles
  - Workflow
  - Desk calculator example
- Turing Machines
  - Basics
  - A working example
  - Skimming over some topics of computability

Feedback round

- What was the best part of todays lecture?
- What part of todays lecture has the most potential for improvement?
  - Optional: how would you improve it?

Goals for Today

- General remarks
- Refresher
- Open questions
- Examn exercises

Zur Klausur

- Abschlussklausur *formale Sprachen und Automaten*
  - Ort: Rotebühlplatz 41, Raum 0.10 (Erdgeschoss!)
  - Zeit: Dienstag, 25.11.2014, 11:00 (Pünktlich!)
  - Dauer: 120 Minuten
  - Hilfsmittel:
    - Skript (geheftet oder im Ordner)
    - Eigene Notizen (geheftet oder im Ordner)
    - Keine Loseblattsammlungen!
    - Keine (!) Computer (auch nicht, wenn Sie Tablett oder Mobiltelefon heißen)
- Zur Übungsklausur (heute)
  - Umfang etwas größer
  - Aufgaben tendenziell etwas schwerer
  - Echte Klausur wird *ähnlich, nicht identisch!*
    - Generell: Andere Aufgaben!
    - Z.t. andere Stoffgebiete

General remark

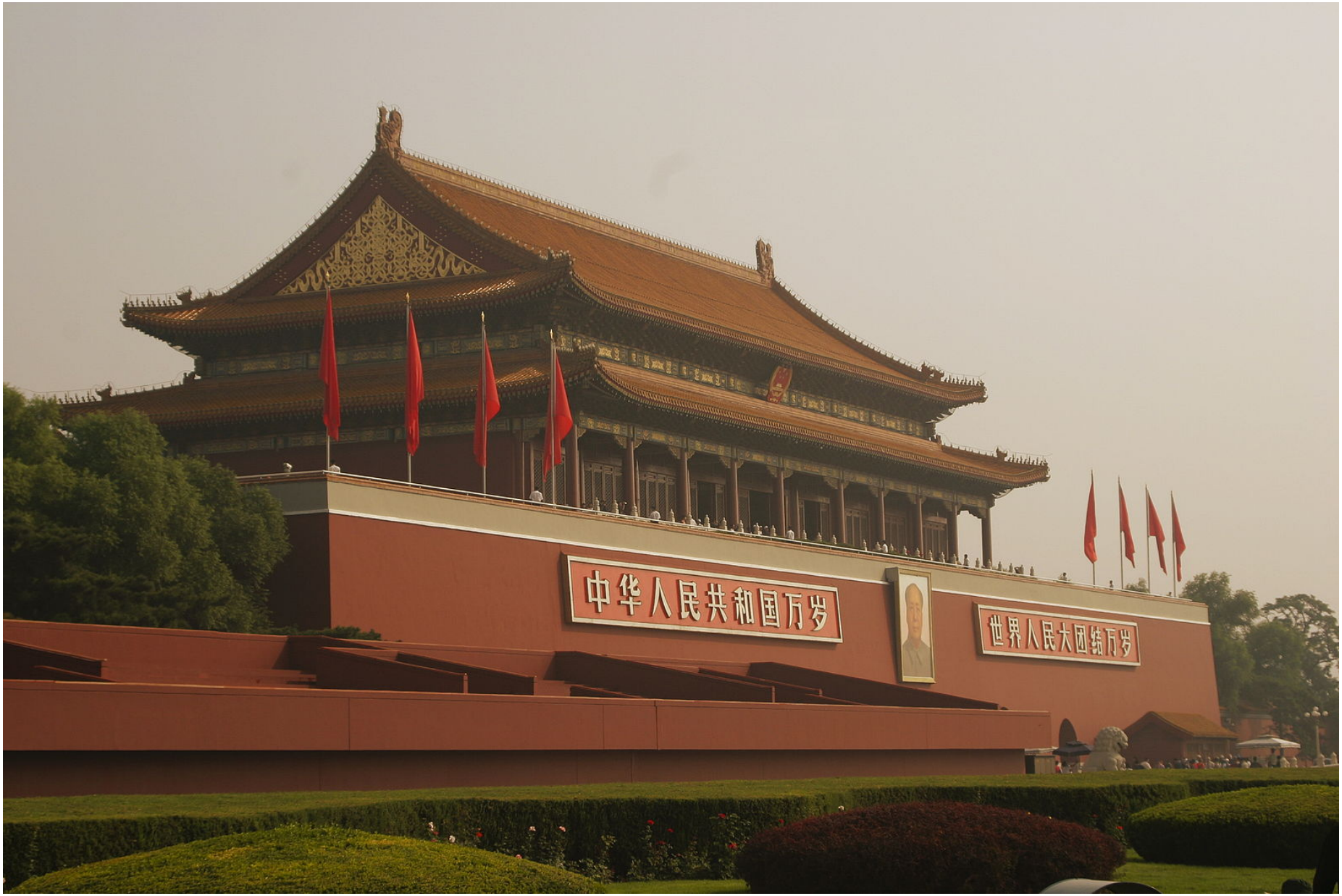

Refresher

- Bison
  - Grammar with actions executed on reduce
  - Workflow and integration with flex
  - Example: Desk calculator
  - Homework (extend desk calculator)
- Turing machines
  - Simple model of instruction-executing machine
  - Infinite tape with read/write head
  - Finite control
  - “Turing-complete” - can do every computation any known computing paradigm can do
- Examples and meta-results

Open Question

- Exercise: Use the known closure properties to show that context-free languages are not closed under complement.
- We know:
  - The class of context-free languages is closed under union (Combine grammars with $S_0 \to S_1, S_0 \to S_2$)
  - The class of context-free languages is not closed under intersection ($a^n b^n c^m \cap a^m b^n c^n$ is not CF).
- Now assume the class of CF languages were closed under complement. Let L_1, L_2 be arbitrary CF languages.
  - Then: $\overline{L_1}, \overline{L_2}$ are CF.
  - Then $\overline{L_1} \cup \overline{L_2}$ is CF
  - Then $\overline{\overline{L_1} \cup \overline{L_2}} = L_1 \cap L_2$ is CF
  - Hence the CF languages would be closed under intersection, which is wrong. Hence the assumption is wrong and CF languages are not closed under complement.

Übungsklausur

Goals for Today

- General remarks
- Refresher
- Open questions
- Examn exercises

This is the End…